IMPORTANT! KEEP FOR FUTURE REFERENCE

Solace+Co

VELMOR SHOE CABINET

Assembly Instruction

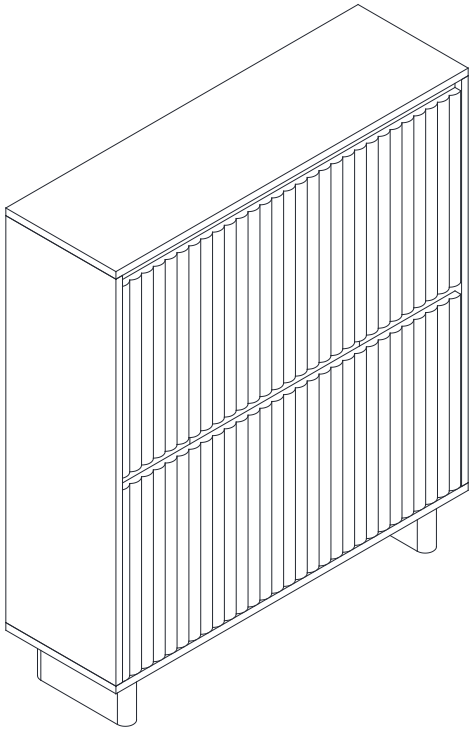

Size.800x250x930mm

Manufacturer: **FLAIR FURNITURE LTD**

Address: **Oldfield Ln, Heckmondwike WF16 0JD**

Contact Information: **support@bedkingdom.co.uk**
01924950108

EU REP **Contact Information: eucomply OÜ**

Address: Pärnu mnt 139b-14 11317 Tallinn, Estonia

Contact Information: hello@eucompliancepartner.com
+3375690241



⚠ **WARNING: Contains small parts – choking hazard.**

⚠ **WARNING: Plastic packaging may cause suffocation. Keep away from babies and young children.**

⚠ **WARNING: Keep away from open flames and other heat sources.**

⚠ **WARNING: Ensure adequate airflow and ventilation at all times to prevent damp and mould.**

⚠ **WARNING: Ensure all attachments are secure before use. Do not use if parts are loose or damaged.**



60 min
(Approx) Set Up



2 PEOPLE ASSEMBLY

FLOOR AREA
3Mx3M

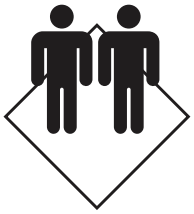

REQUIRED ASSEMBLY SPACE

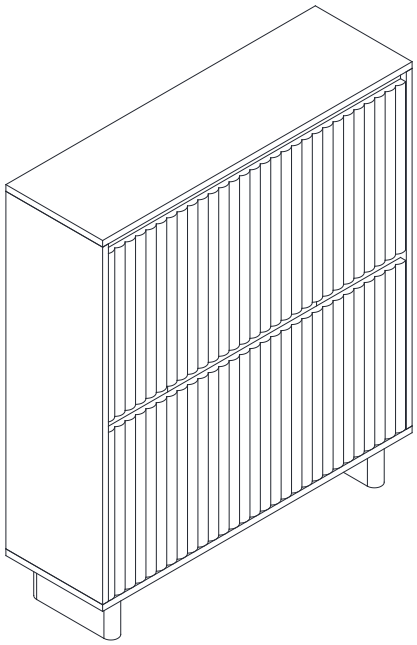

Hardware List

A x 12 pcs	**B x** 12 pcs	**C x** 20 pcs	**D x** 12 pcs	**E x** 11 pcs	**F x** 12 pcs	**G x** 4 pcs
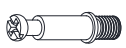 CAM BOLT	 CAM LOCK	 Ø6x30mm WOOD DOWEL	 Ø4x25mm SCREW	 Ø4x40mm SCREW	 Ø4x12mm SCREW(ROUND HEAD)	 Ø4x12mm SCREW(FLAT HEAD)

H x 4 pcs	**I x** 4 pcs	**J x** 4 pcs	**K x** 6 sets	**L x** 2 sets	**M x** 2 sets
 PLASTIC WASHER	 PIVOT BUSH	 DOOR STOPPER	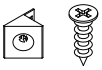 BACK PANEL FIXING CLIP & SCREW	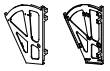 SHOES CABINET HINGES (L/R)	 WALL FIXING KIT

Parts List

Carton 1 of 1					
NO.	Part List	**QTY**	**NO.**	Part List	**QTY**
1	TOP PANEL	**1**	11	DIVIDER PANEL	**2**
2	SIDE PANEL (L)	**1**	12	CABINET DOOR	**2**
3	SIDE PANEL (R)	**1**			
4	BACK SUPPORT BAR	**2**			
5	FRONT SUPPORT BAR	**1**			
6	BACK PANEL	**1**			
7	BOTTOM PANEL	**1**			
8	LEG	**2**			
9	BOTTOM SUPPORT BAR	**1**			
10	SHELF PANEL	**4**			

Parts List

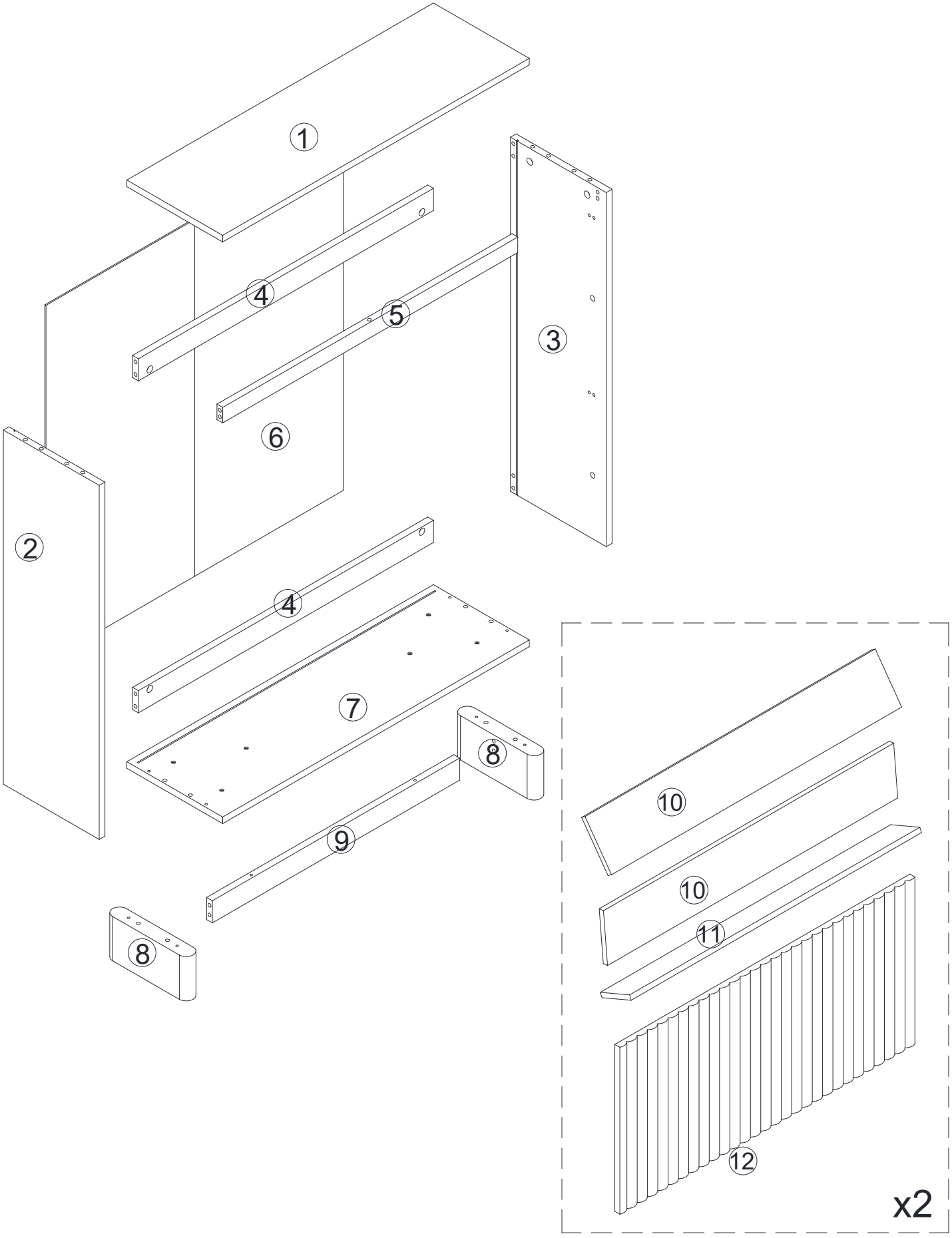

STEP 1

A		6
J		4
I		4

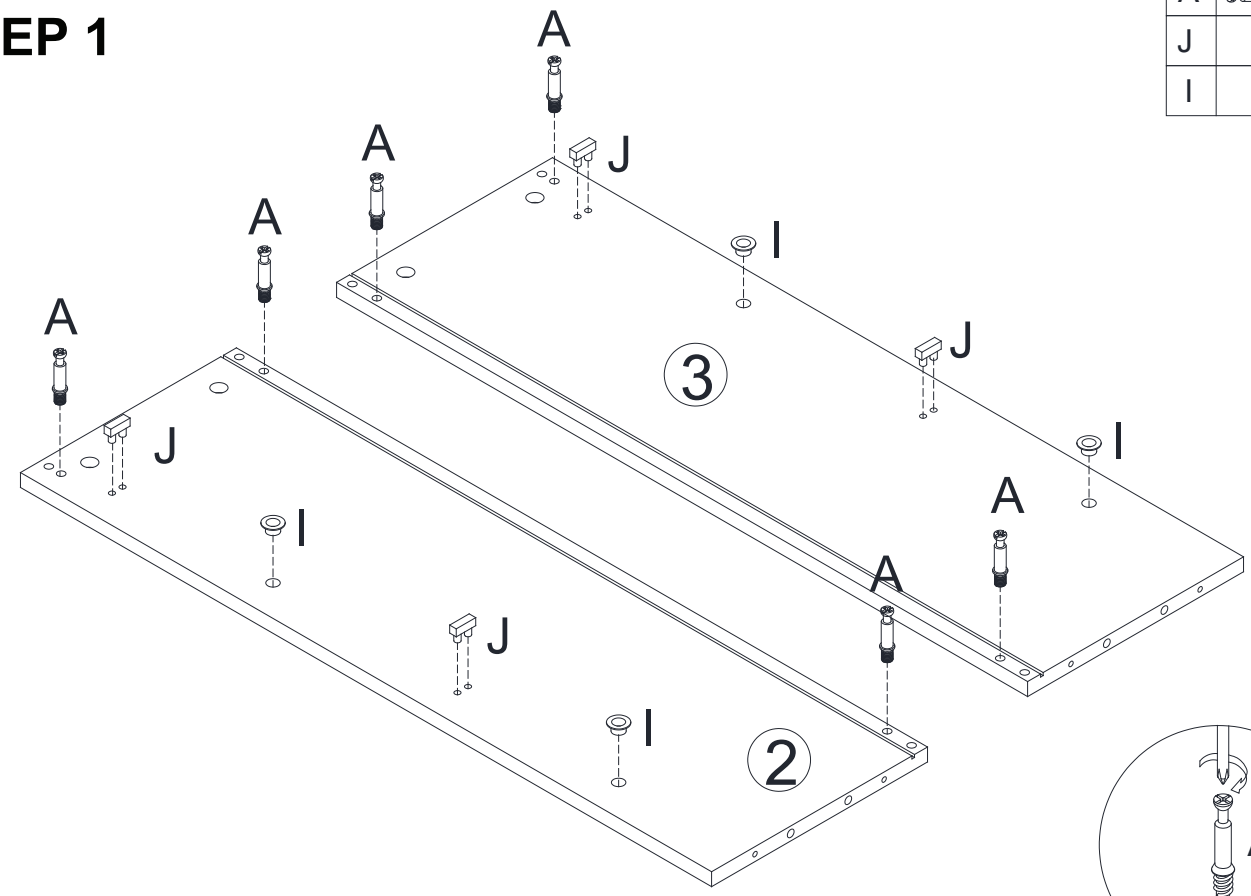

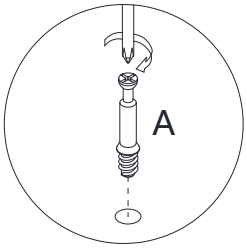

STEP 2

B		6
C		6

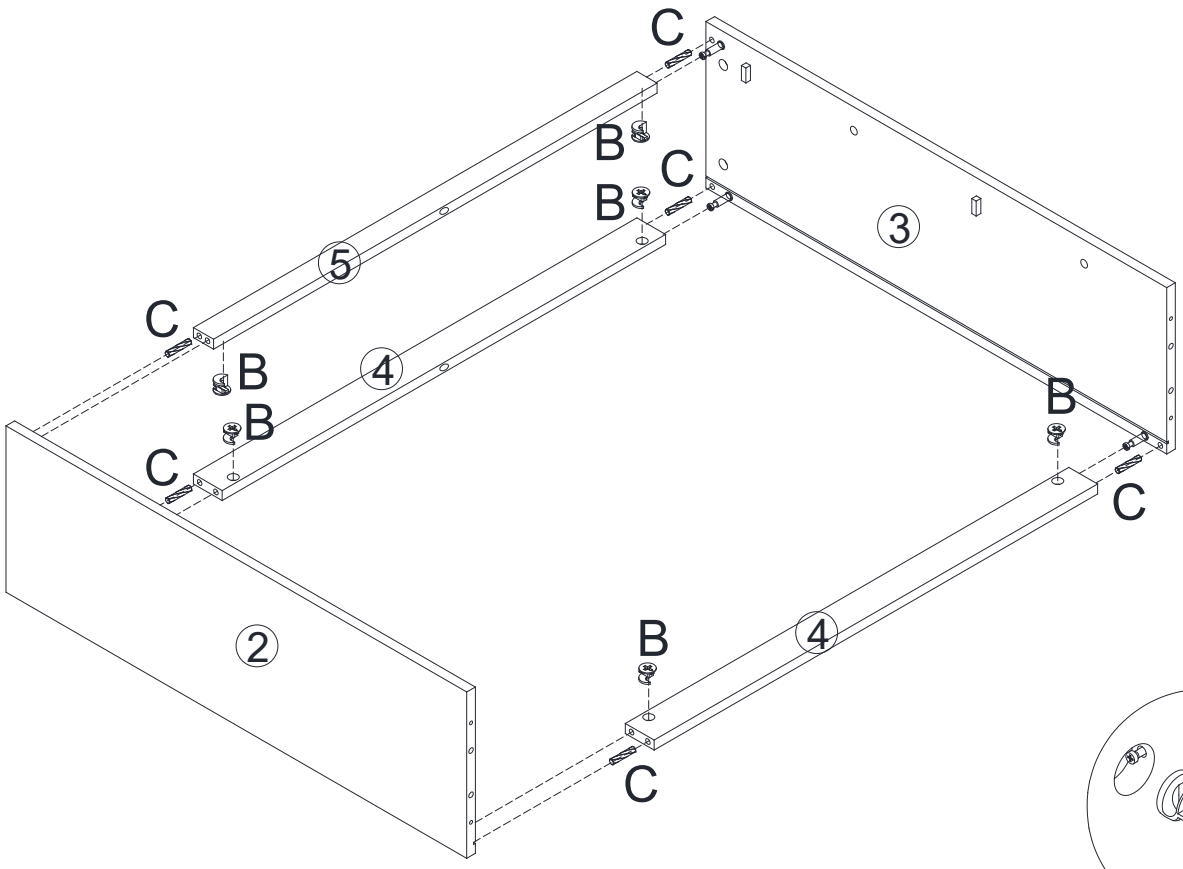

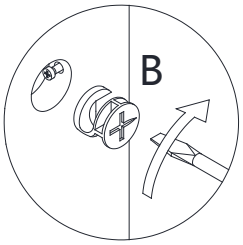

STEP 3

A		2
B		2
C		2

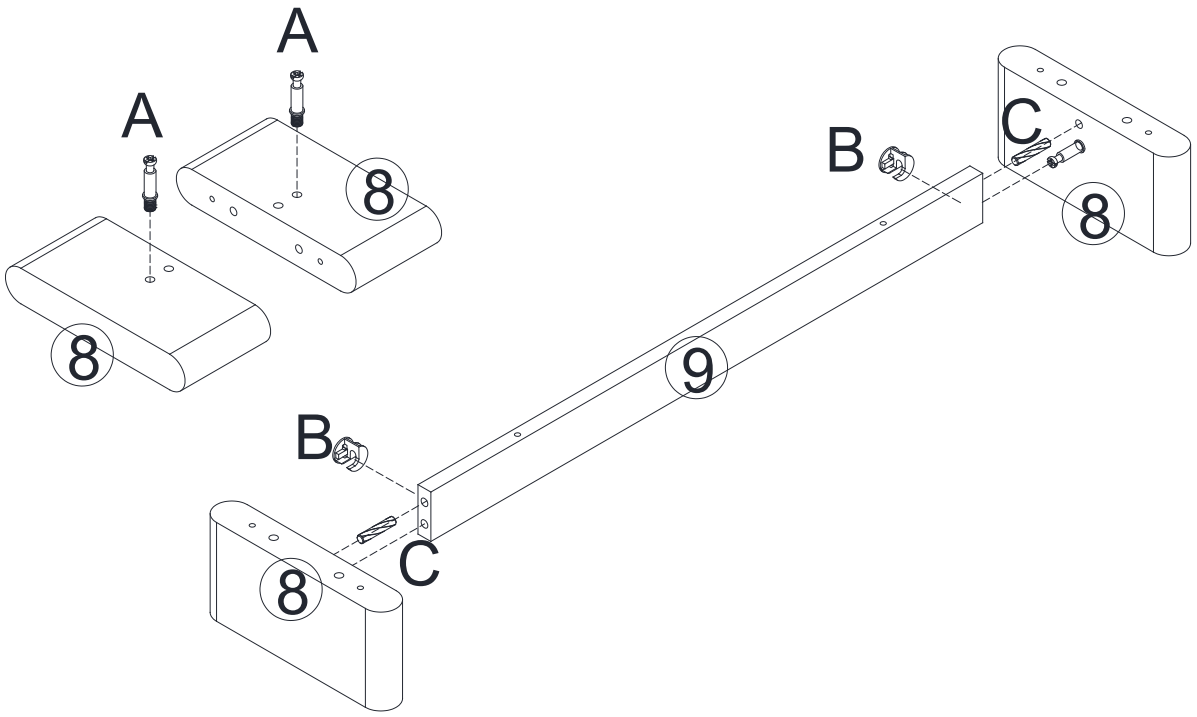

STEP 4

E		6
C		4

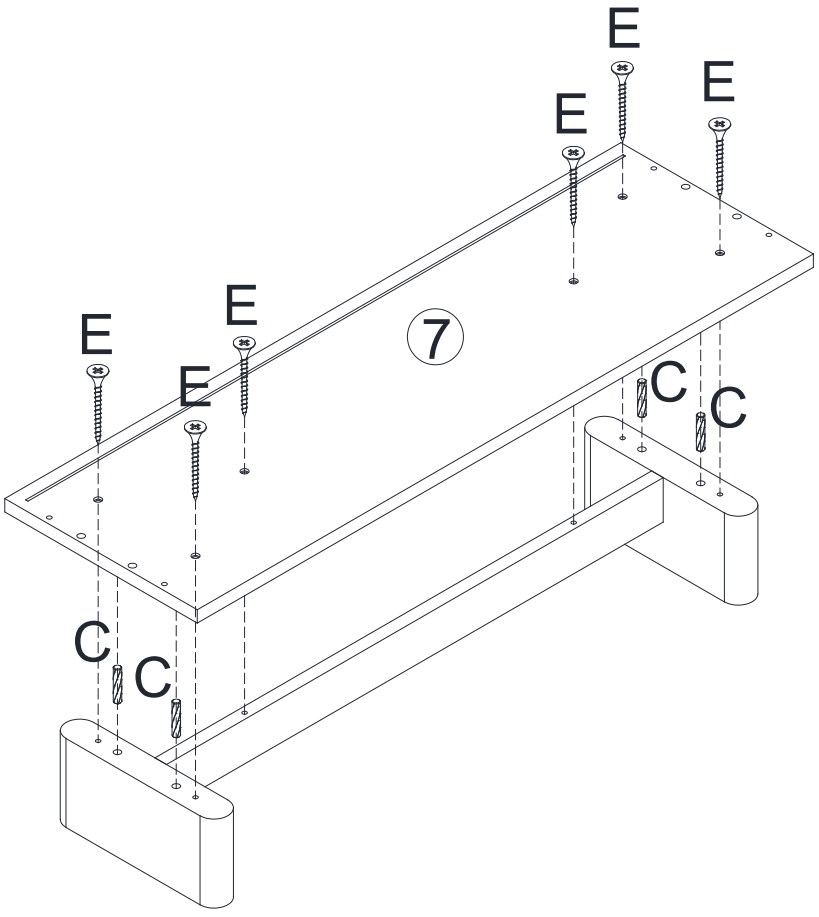

E		4
C		4

STEP 5

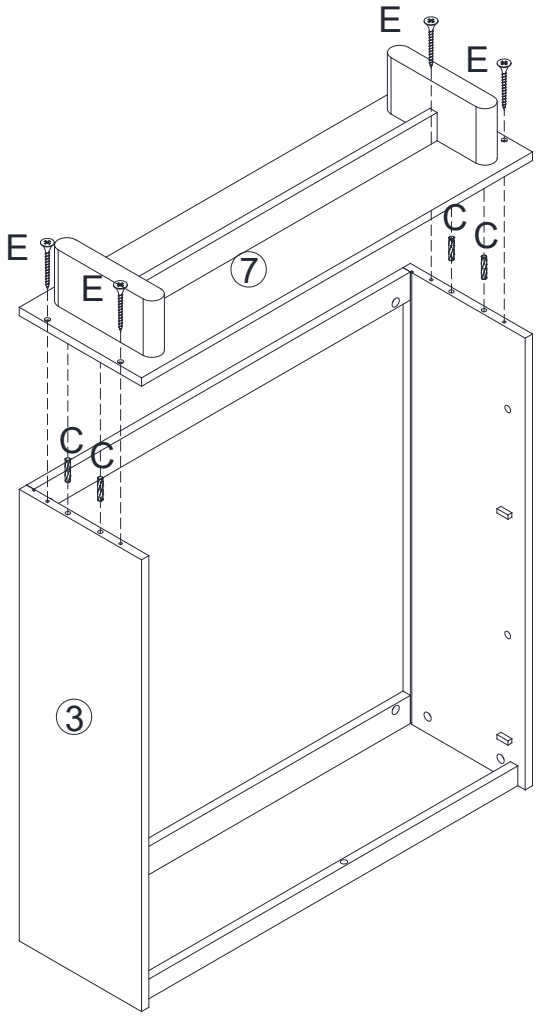

A		4

STEP 6

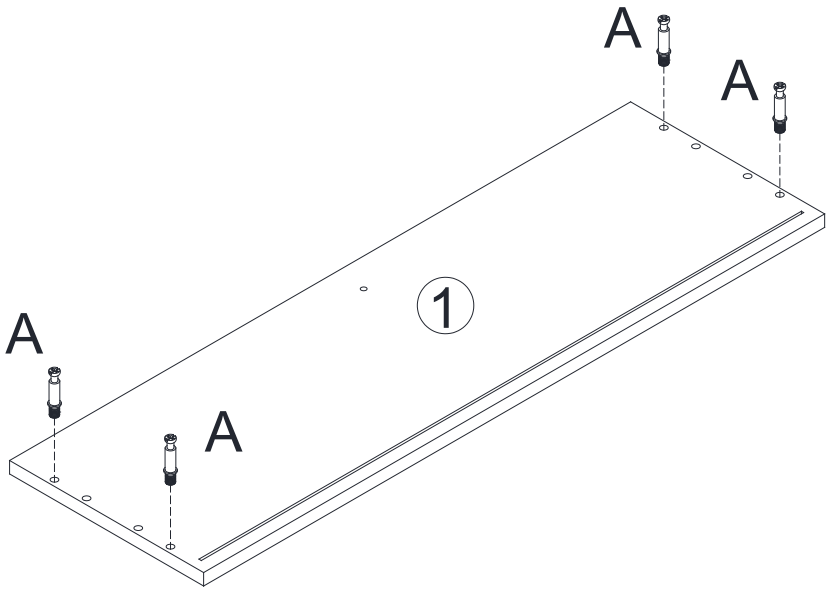

STEP 7

B		4
C		4
E		1

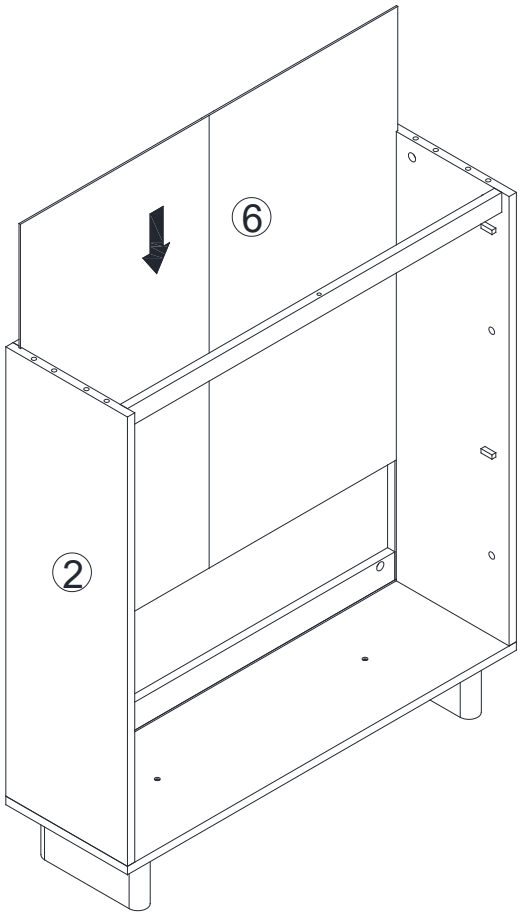

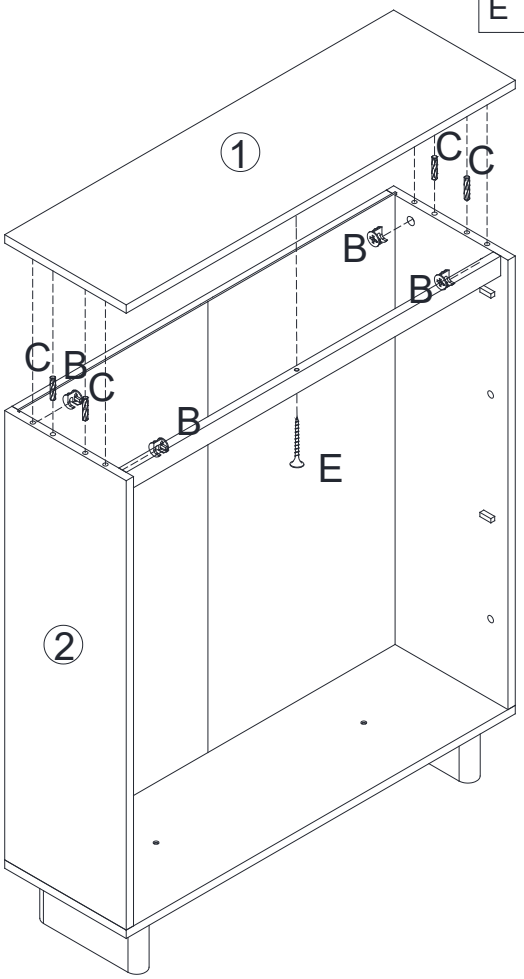

STEP 8

F		12
L	 (L)	2
	 (R)	

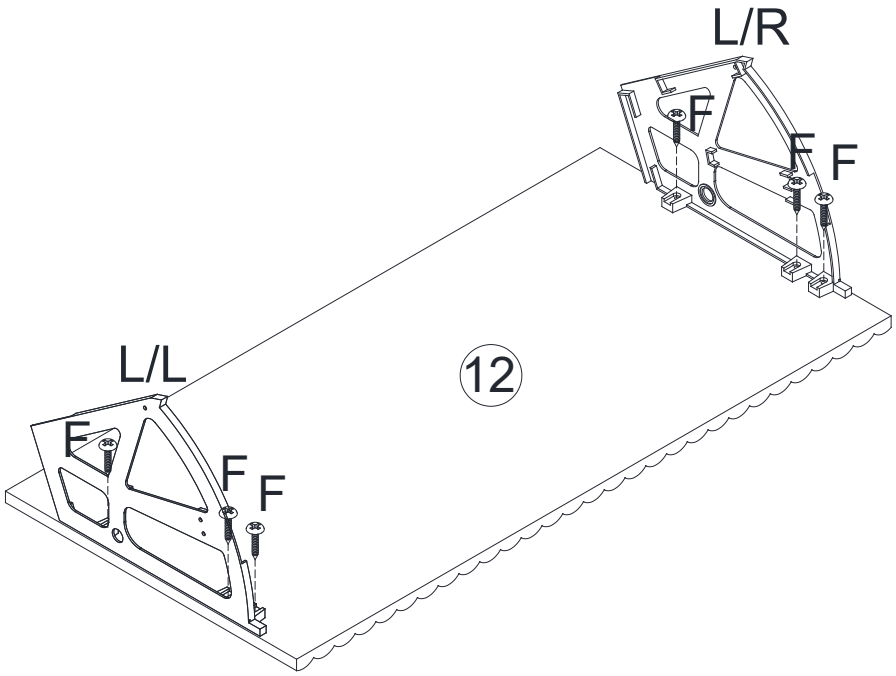

x2

D		4

STEP 9

x2

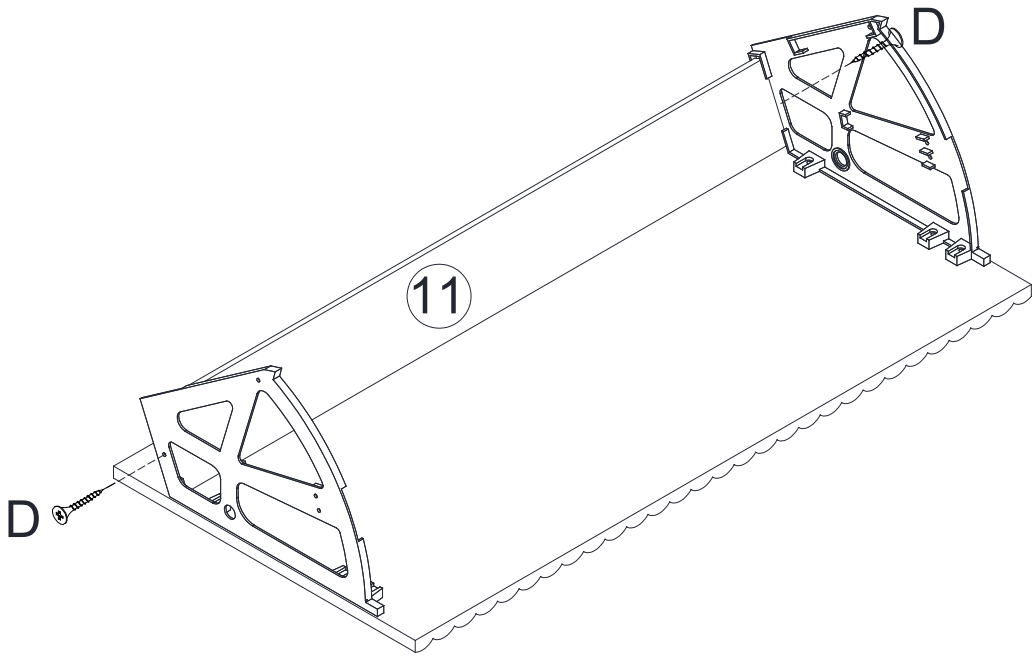

D		4

STEP 10

x2

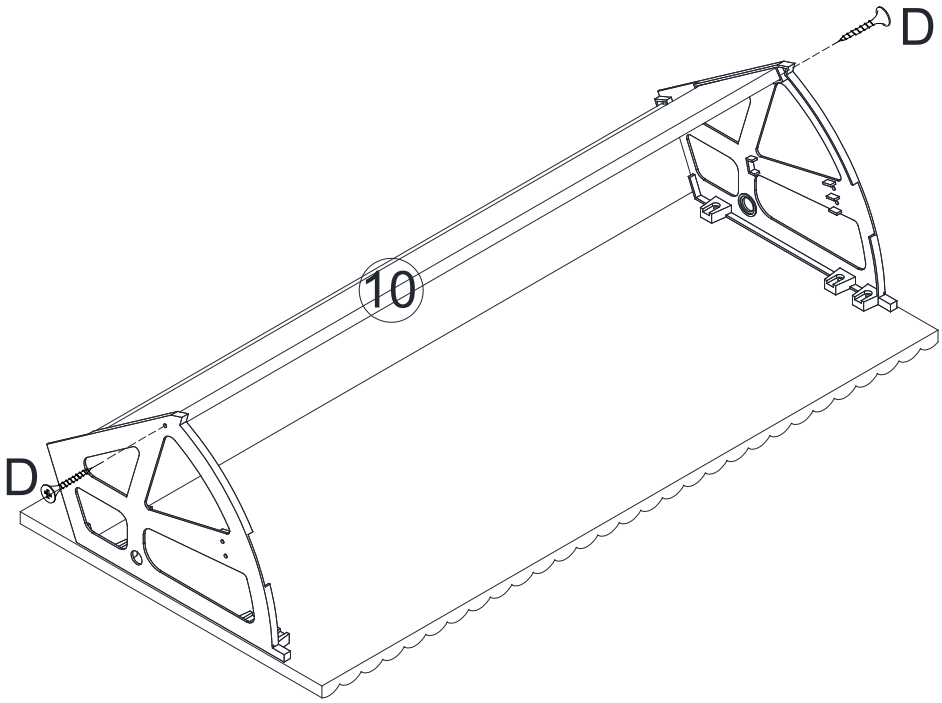

G		4
H		4

STEP 11

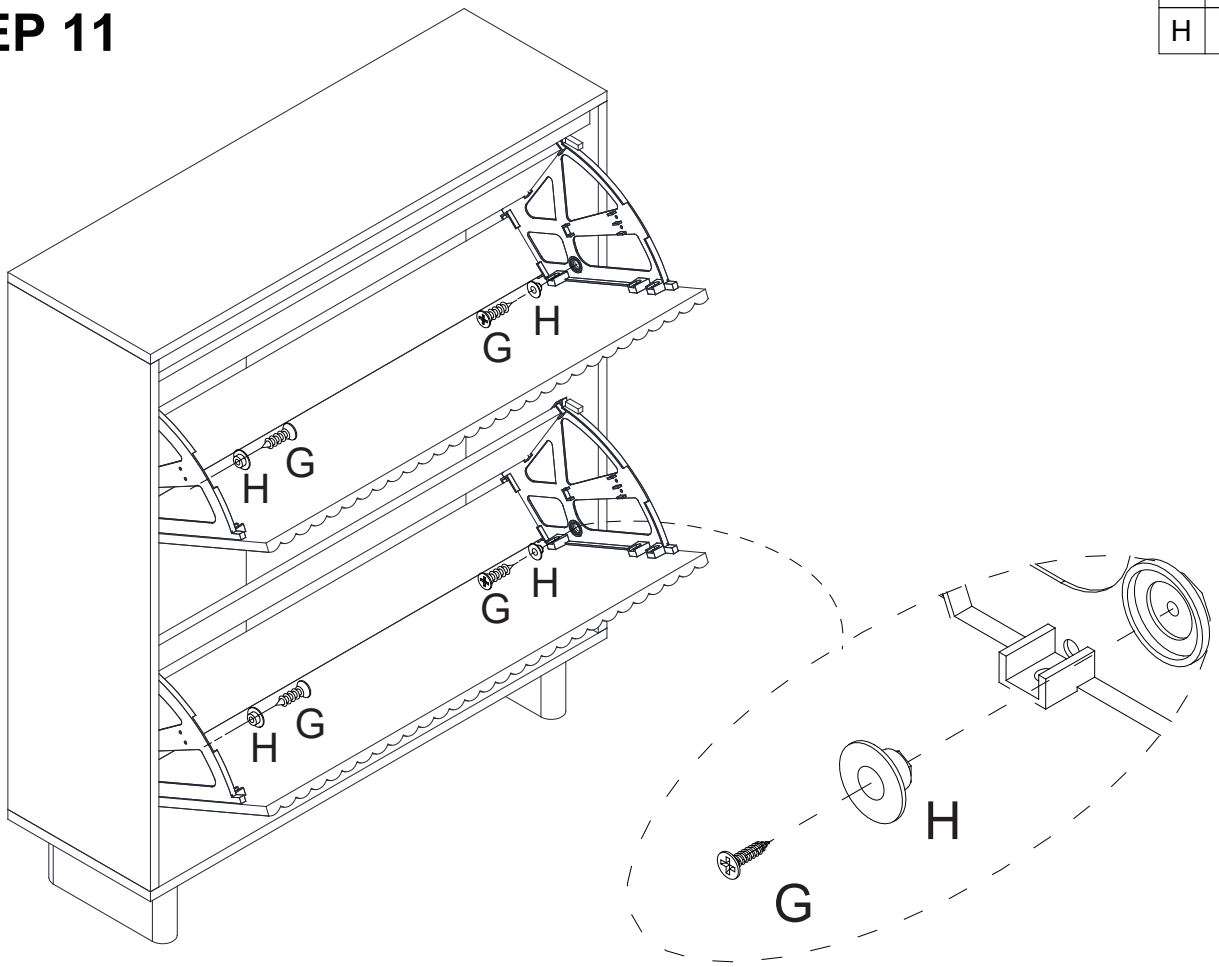

D		4

STEP 12

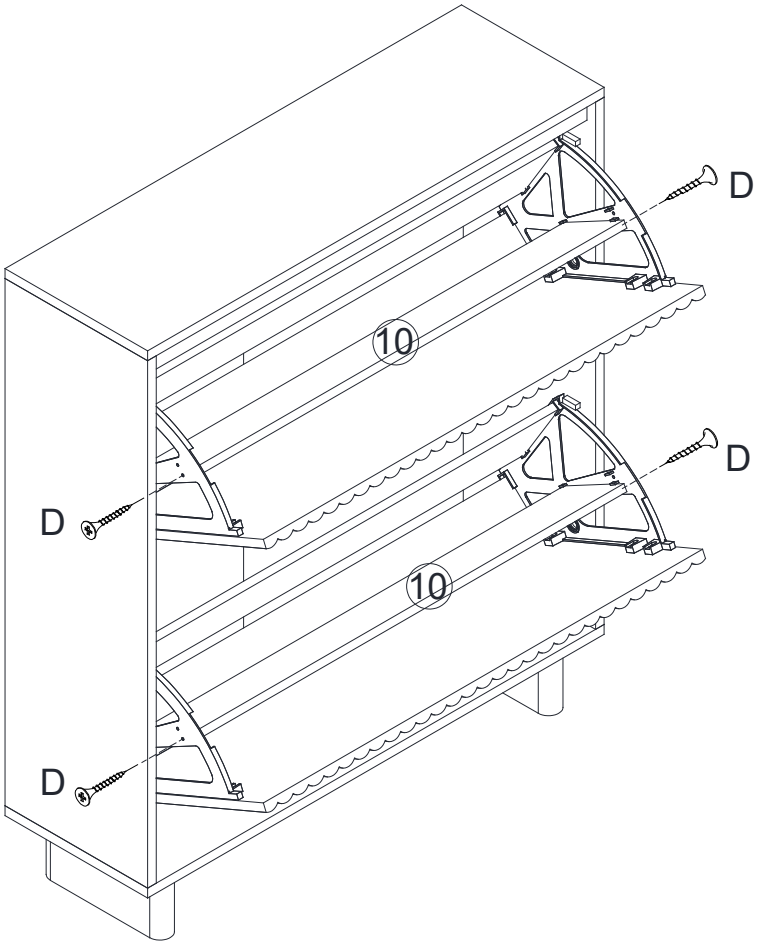

K | 6

STEP 13

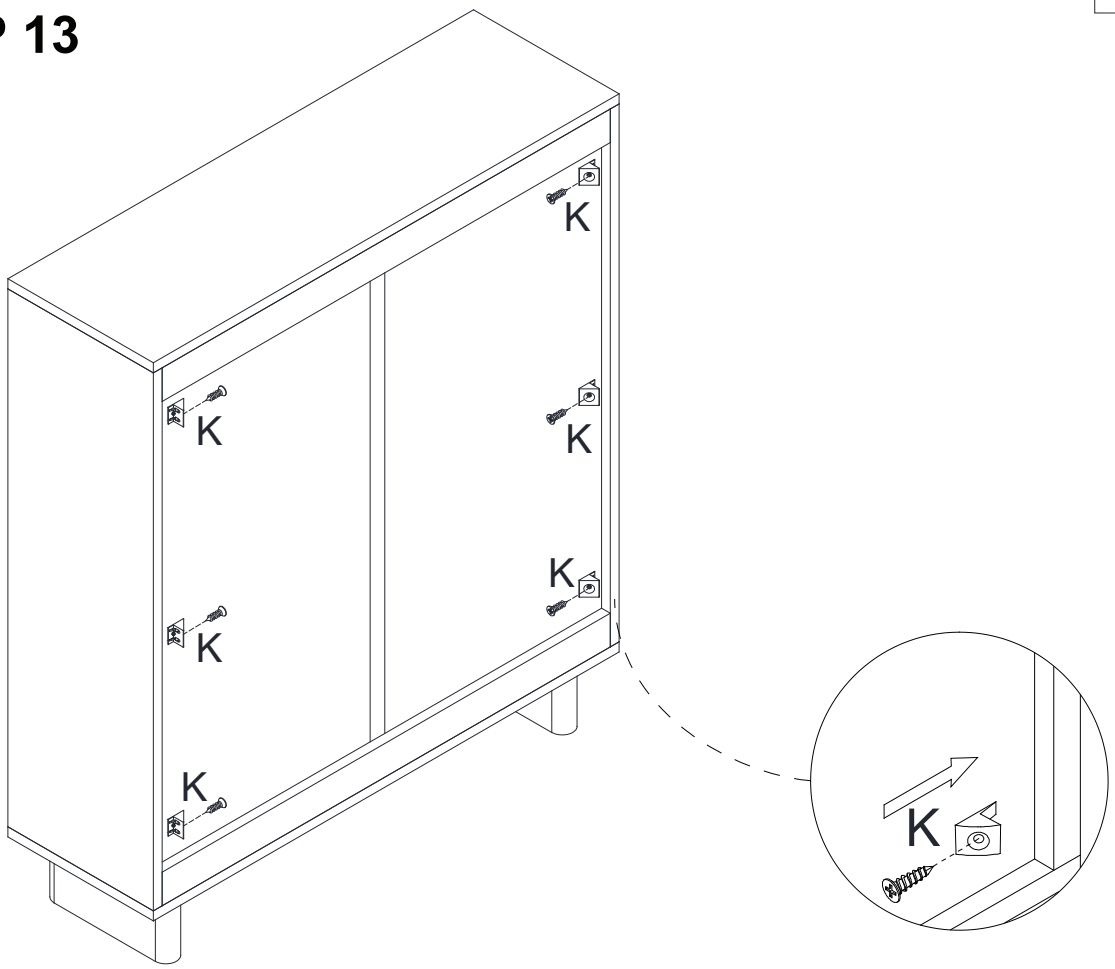

M | 2

STEP 14

