IMPORTANT! KEEP FOR FUTURE REFERENCE

SOLACE+CO

Kora Mocha Brown Dining Chair Set

ASSEMBLY INSTRUCTION



FOR PARTS & TECHNICAL SUPPORT VISIT:

Telephone: 01924950108

Email Address: support@bedkingdom.co.uk

Manufacturer: FLAIR FURNITURE LTD

Address: Oldfield Ln, Heckmondwike WF16 0JD

Contact Information: support@bedkingdom.co.uk 01924950108

EU REP

Contact Information: eucomply OÜ

Address: Pärnu mnt 139b-14 11317 Tallinn, Estonia

Contact Information: hello@eucompliancepartner.com +3375690241

⚠ WARNING: Contains small parts -choking hazard.

⚠ WARNING: Plastic packaging may cause suffocation. Keep away from babies and young children.

⚠ WARNING: Keep away from open flames and other heat sources.

⚠ WARNING: Ensure adequate airflow and ventilation at all times to prevent airway obstruction.

⚠ WARNING: Never leave a child unattended in a stroller with this product. Strangulation hazard may occur.

⚠ WARNING: Ensure all attachments are secure before use. Do not use if parts are loose or damaged.



2 Person assembly recommend



30 min (Approx) Set Up

DETAIL VIEW

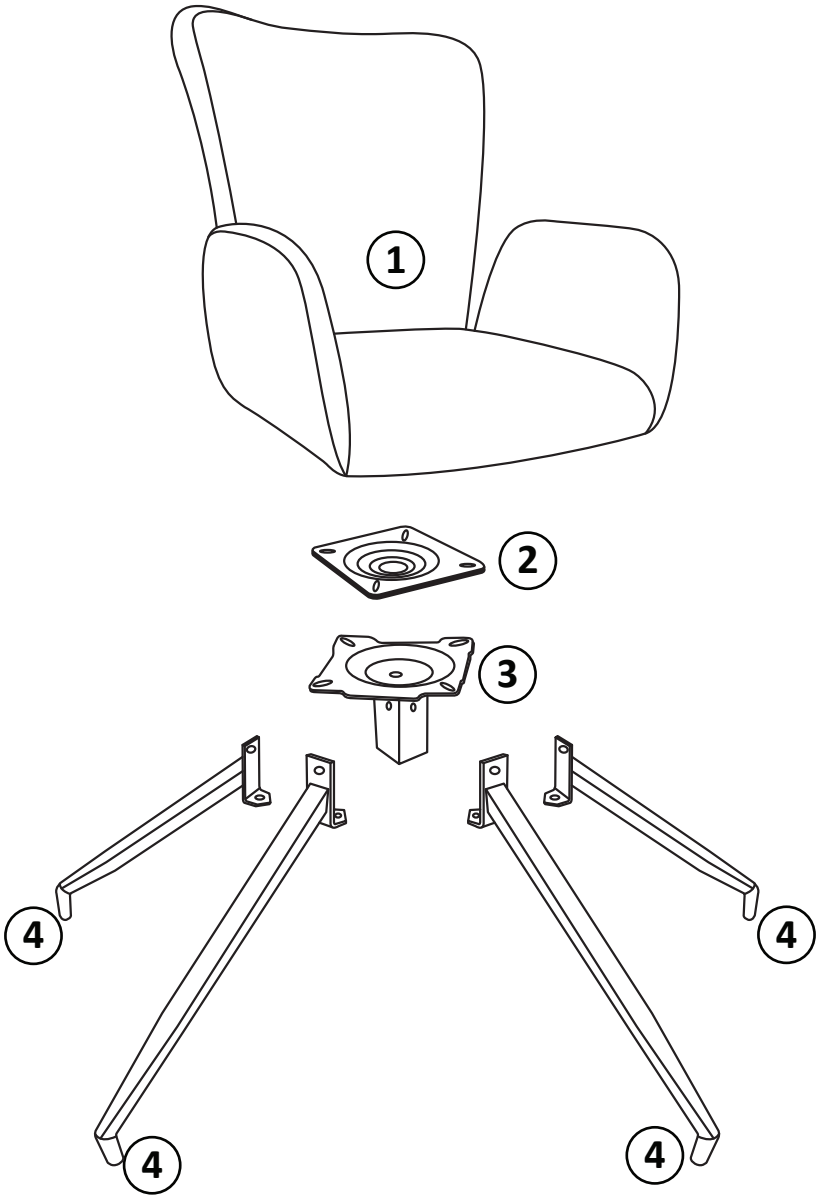

Parts List

No.	Part Name	Pcs	No.	Part Name	Pcs
①	CHAIR BACK & SEAT 	1	②	SWIVEL METAL PLATE 	1
③	METAL SUPPORT 	1	④	CHAIR LEG 	4

Hardware List

A	B	C	D	E
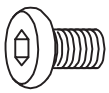		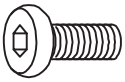		
M8x16mm	M6x10mm	M6x18mm	M6x16mm	
8 PCS	4 PCS	4 PCS	8 PCS	1 PCS

1

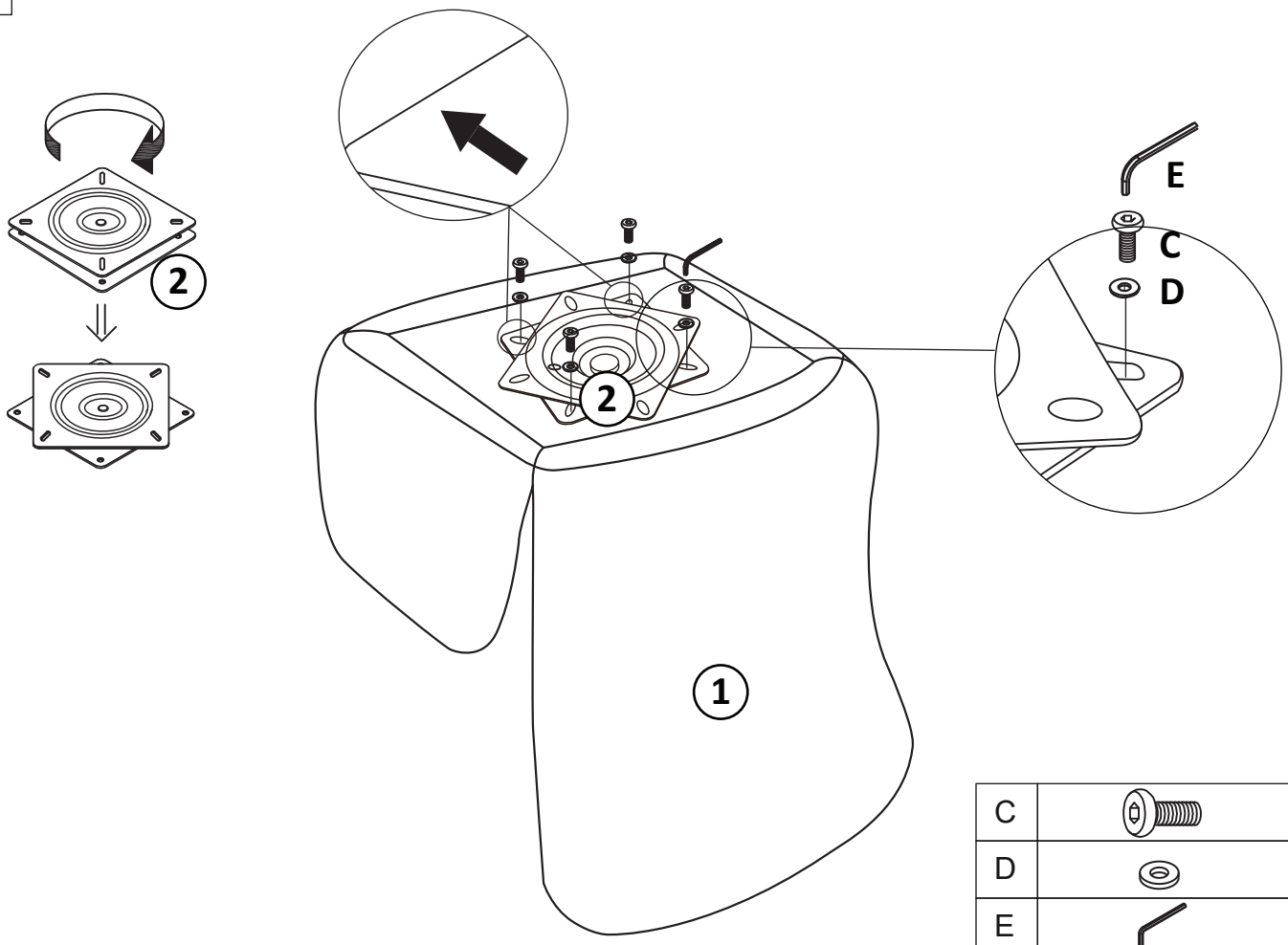

C		4
D		4
E		1

2

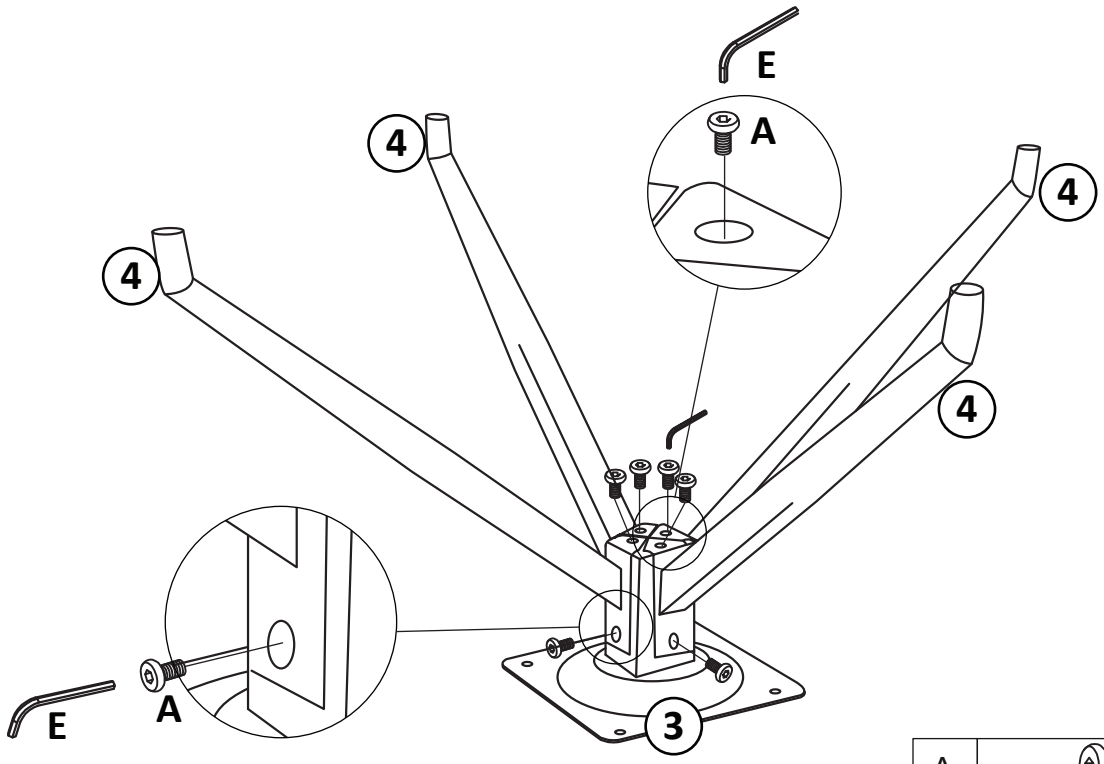

A		8
E		1

3

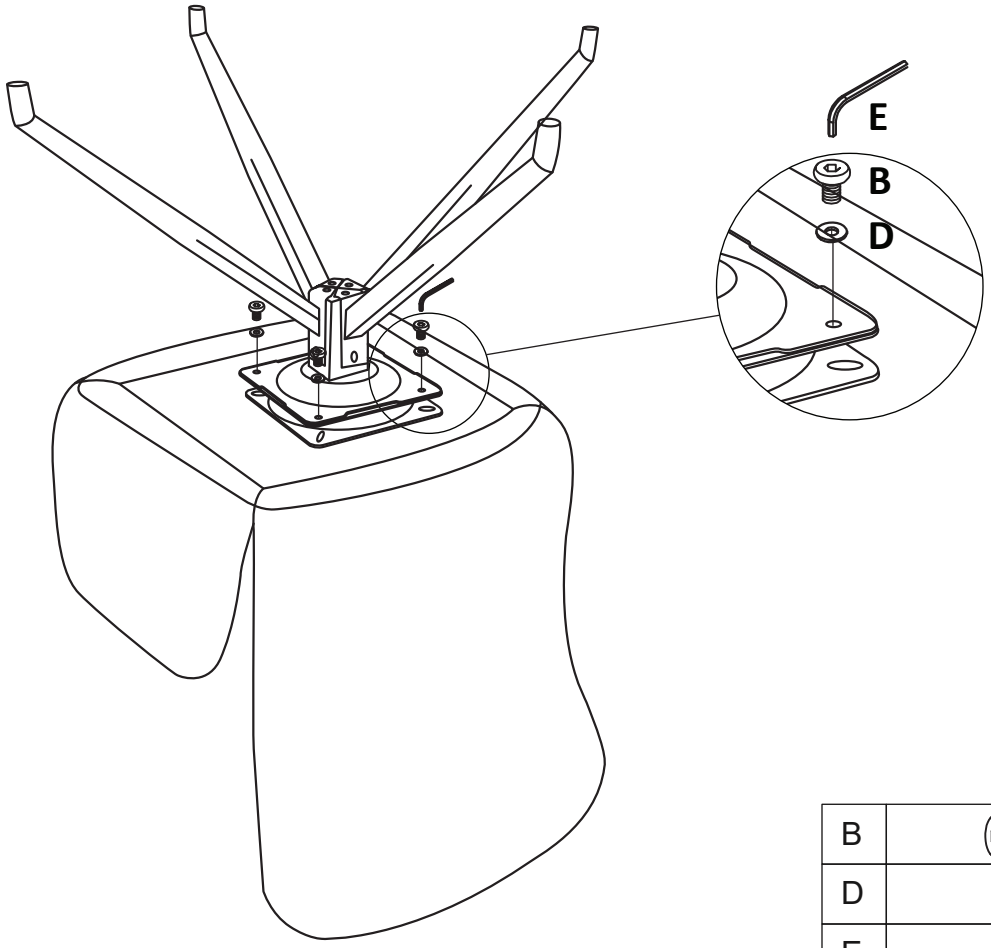

B		4
D		4
E		1

4

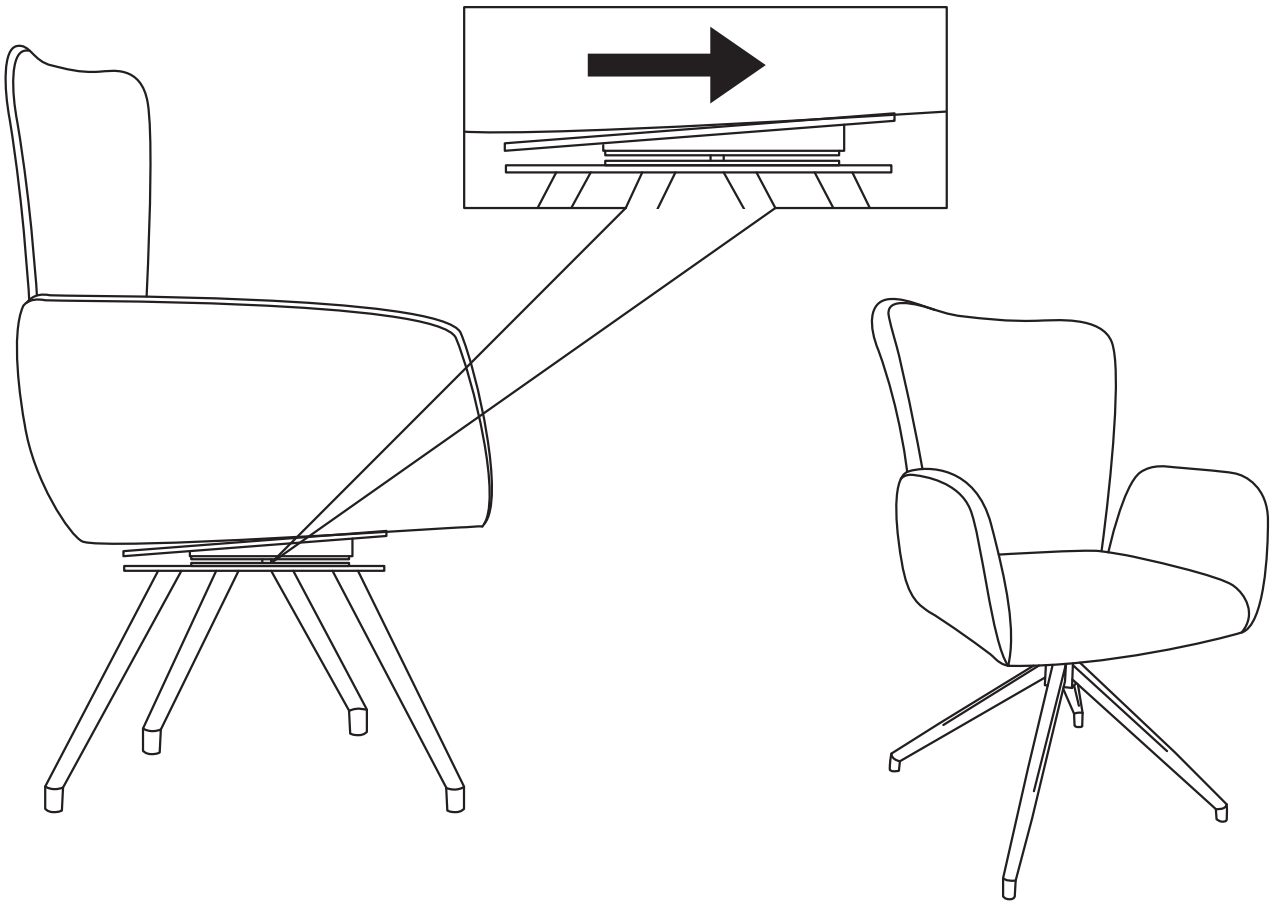

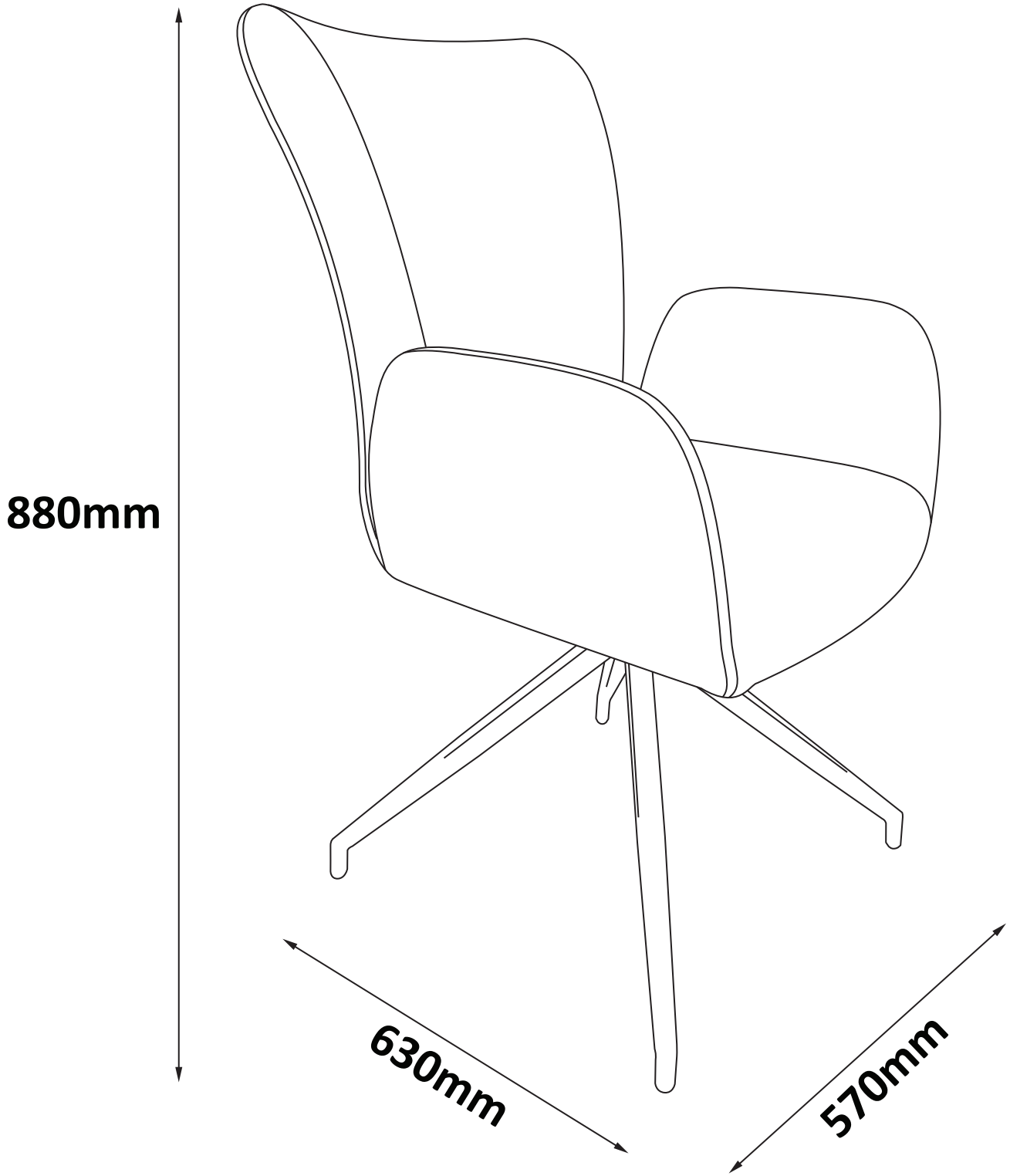
880mm
630mm
570mm