IMPORTANT! RETAIN FOR FUTURE REFERENCE

Flair furnishings

GRAVITY BUNK BED

Assembly Instructions

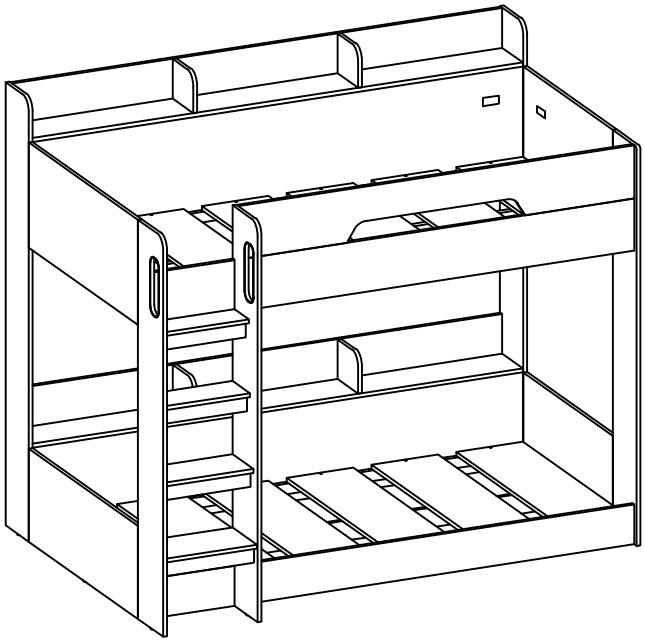

Dimensions: 195 x 132.2 x 166.5 cm

For parts and Technical Support contact :
Telephone 01924950108
E-Mail support@bedkingdom.co.uk

Tools required (not supplied)

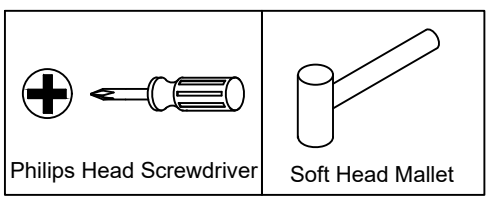

2 Persons assembly recommended

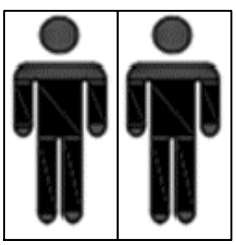

x 2

180 minute (Approx.) for assembly

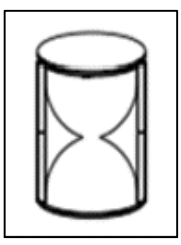

Produced in Malaysia for Flair Furniture Ltd t/a bedkingdom.co.uk

ASSEMBLY INSTRUCTIONS

MANUFACTURED TO BS EN 747-1:2024

IMPORTANT - READ CAREFULLY.

PLEASE READ this sheet prior to assembly to familiarize yourself with the various stage of construction. Do Not destroy any of the packing until you are certain that you have all the necessary parts for assembly.

CAUTION: There are small components used in the construction of this unit. These loose items should be kept away from young children whilst assembling your unit to avoid the danger of choking hazards.

INFORMATION:

- Importer - Flair Furniture LTD, Oldfield Lane, Heckmondwike, West Yorkshire, England, WF16 0JD
- Due to the size of this product, we recommend that is assembled in the room intended for use.
- When you are ready to start, make sure that you have the right tools, plenty of space and clean, dry area for assembly.
- Unwrap all packaging materials and place each component on top of the carton box or on a clean floor to prevent from scratching.
- Check the pack and make sure you have all the parts listed.
- Tools are not included unless specified in the parts list.
- Ensure that this product is fully assembled as illustrated before use.
- Please keep the assembly instruction for future reference.
- If for any reason you need to return this item, you must return in original packaging. Please be note that assembled items cannot be returned.

WARNING:

- Always follow the manufacturer's instruction.
- This product should only be used on firm, level floor.
- Keep small parts out of reach of children.
- Do Not use power tools to construct this product as this may invalidate your warranty.
- Do Not over tighten the screw or bolts.
- Do Not tighten screw until the product is fully assembled.
- Do Not use the bunk bed / high bed if any structural part is missing, damaged or worn.
- Do Not expose this product to dripping or splashing, rain or areas with heavy moisture.
- Do Not place this product in direct sunlight, open flames such as candles or heat, such as radiators. Keep away from temperature over 35°c.



- High bed and the upper bed of the bunk beds are not suitable for children under six years due to the risk of injury from falls.
- Bunk bed and high bed can be present a serious risk of injury from strangulation if not used correctly. Never attach or hang items to any part of the bunk bed that are not designed to be used with the bed, for example, but not limited to ropes, strings, cords, hooks, belts and bags.
- Children can become trapped between the bed and the wall, a roof pitch, the ceiling, adjoining pieces of furniture (e.g. cupboards) and the like. To avoid risk of serious injury the distance between the top safety barrier and the adjoining structure shall not exceed 75mm or shall be more than 230mm.
- Ensure thickness of mattress below the mark that had been made at the entrance of the upper bunk.
- Ensure the ventilation of the room is necessary in order to keep the humidity low and to prevent mould in and around the bed.
- Ensure the support legs/base always remain in contact with the ground, and always use ladder for entering and leaving the high bed and upper bunk.
- Ensure all screws or bolts are tighten and inspect regularly.
- Recommended size of mattress 190(L) x 90(W) cm
- Upper Bunk - Thickness of mattress 12-20cm.

CARE INFORMATION:

- Never use a scouring pad, abrasives, or chemical cleaners.
- To clean wipe with a damp sponge and warm soapy water. Do Not use solvent-based cleaners or detergents as they can bleach or damage the product.
- Customer support: support@bedkingdom.co.uk

BEFORE YOU START:

- ✓ **Check that this is the item you order especially the correct colour.**
- ✓ **DO NOT throw away the packaging until you are sure you are keeping the bed**
- ✓ **Double check you have all the parts before starting using the parts list in the in these instructions and that there is no damage.**
- ✓ **If you decide to return your bed please repack in the original packaging, wrapping all parts including all the hardware and securely tape seal the box(es). DON'T be afraid to use lots of tape.**

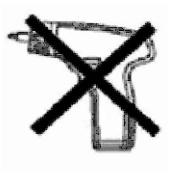

WARNING USING POWER TOOLS TO ASSEMBLE THIS BED IS STRONGLY UNADVISED AS IT MAY BE UNSAFE THE USE OF THESE WILL INVALIDATE ANY CLAIM.

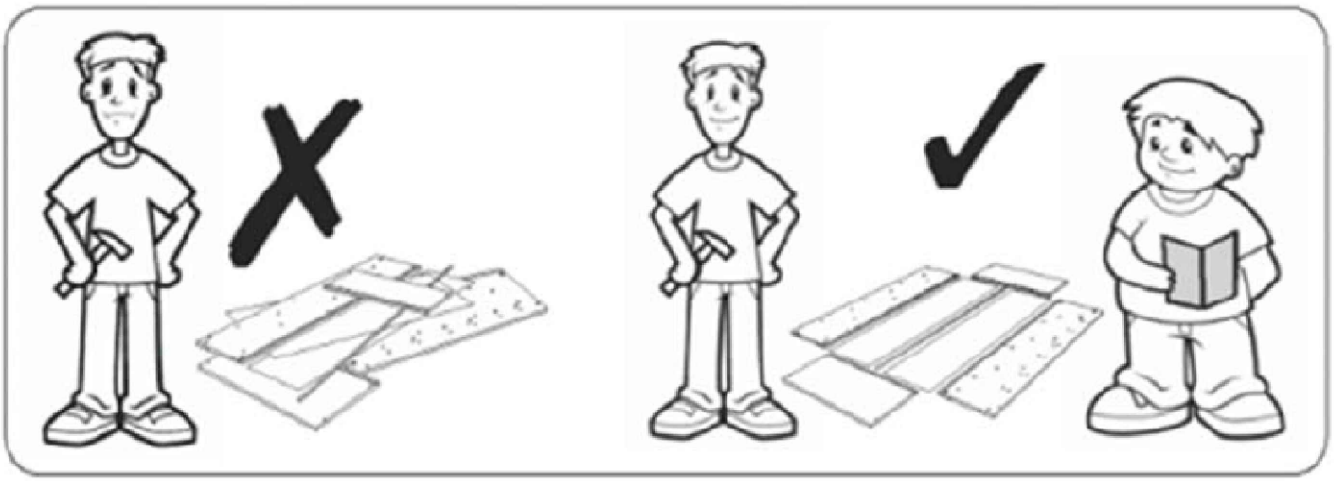

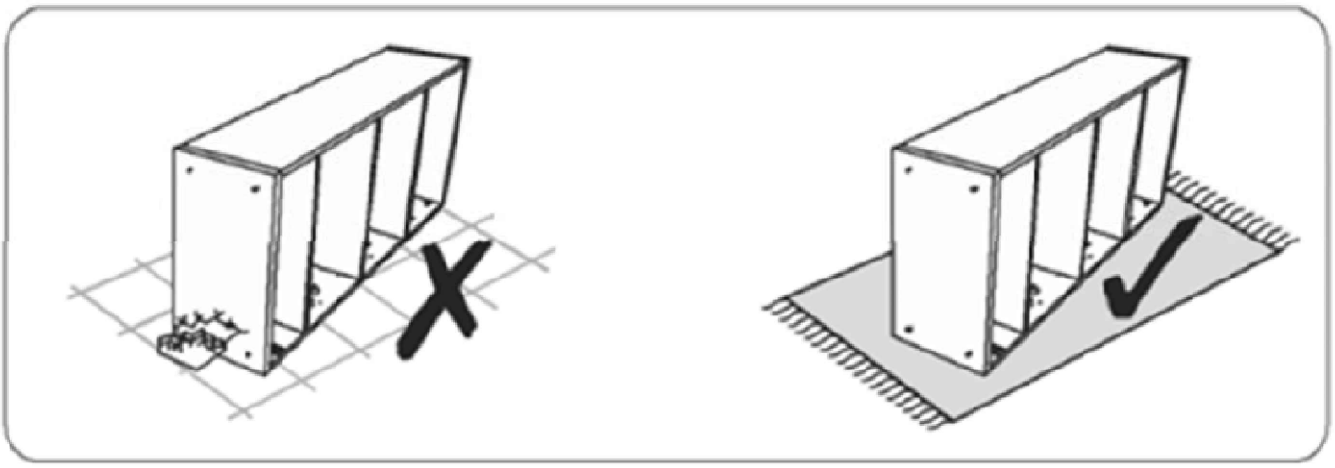

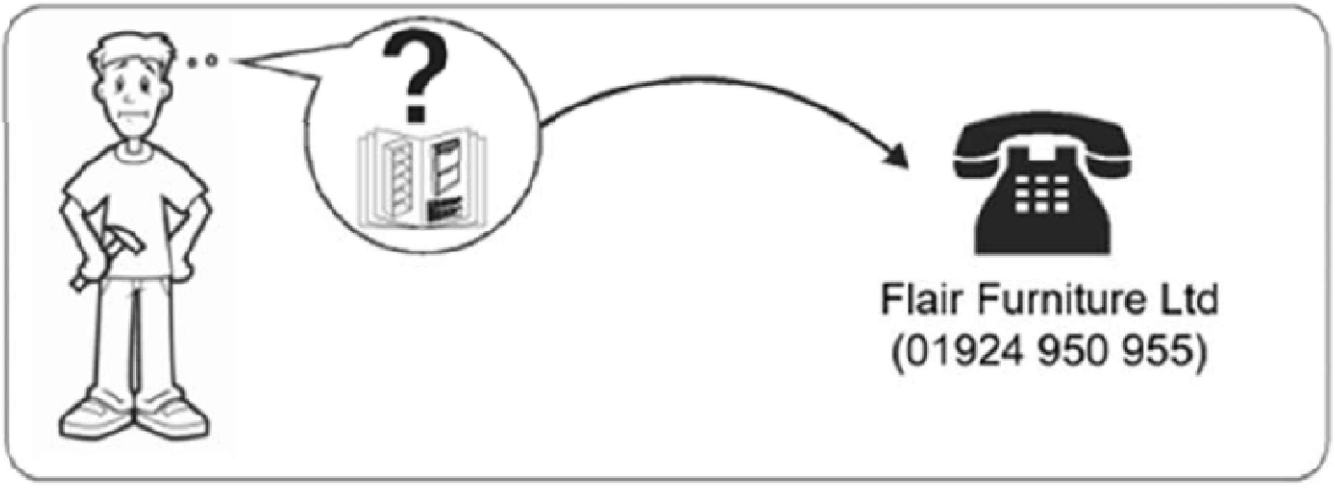

PARTS LIST

Carton 1 of 3:

Part	Description	Qty
25	Base Panel	12
26	Guideline Panel	1
	Hardware	

Carton 2 of 3:

Part	Description	Qty
15	Shelf Back Panel	2
16	Shelf Panel	2
18	Back Guardrail (Upper)	1
20	Front Guardrail (Upper) (Long)	1
21	Back Guardrail (Lower)	1
22	Front Guardrail (Lower)	1
23	Bottom Support	1
24	Base Support Rail	4

Carton 3 of 3:

Part	Description	Qty
1	Side Post (Rear) (Left)	1
2	Side Panel (Upper) (Left)	1
3	Side Panel (Lower) (Left)	1
4	Ladder Side Panel (Left)	1
5	Ladder Side Panel (Right)	1
6	4th Ladder Step	1
7	3rd Ladder Step	1
8	2nd Ladder Step	1
9	1st Ladder Step	1
10	Ladder Step Support	8
11	Side Post (Rear) (Right)	1
12	Side Panel (Upper) (Right)	1
13	Side Panel (Lower) (Right)	1
14	Side Post (Front) (Right)	1
17	Shelf Support Panel	4
19	Guardrail (Upper) (Short)	1

HARDWARE LIST: Carton 1 of 3

Part	Description	Qty
A	M5 x 40mm UNITAR SCREW	64
B	STEEL NUT M6	38
C	JCN M6	15
D	JCBC SCREW M6 x 12mm	4
E	JCBC SCREW M6 x 25mm	11
F	JCBC SCREW M6 x 30mm	9
G	JCBC SCREW M6 x 50mm	22
H	CAM NUT 15mm	38
I	DOUBLE END BOLT 7 mm	6
J	WOOD DOWEL M6 x 25mm	56
K	WOOD DOWEL M8 x 50mm	20
L	METAL CENTER PIPE 1920mm	1
M	CONTRACTFIX DOWEL 5971	16
N	PVC NAIL 5/8"	12
O	CAM BOLT	10
P	CSK SCREW M4 x 38 mm	25
Q	M6 ALLEN KEY	2
R	CSK SCREW M4 x 45 mm	1

PARTS DIAGRAM

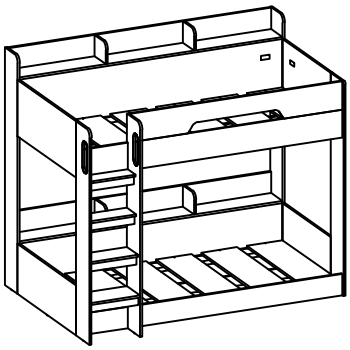

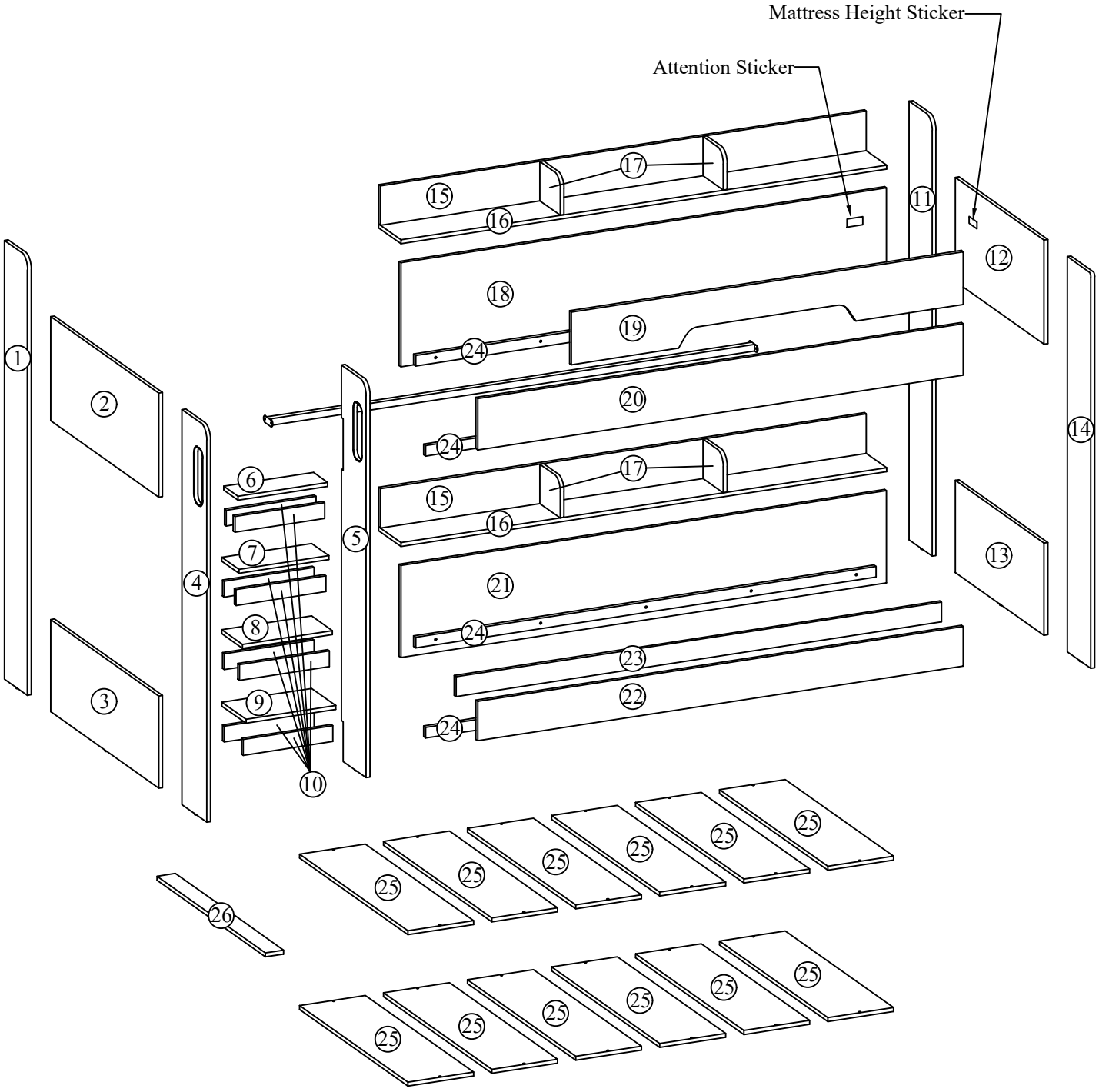

1

B		16
H		10
J		12
N		4
O		10

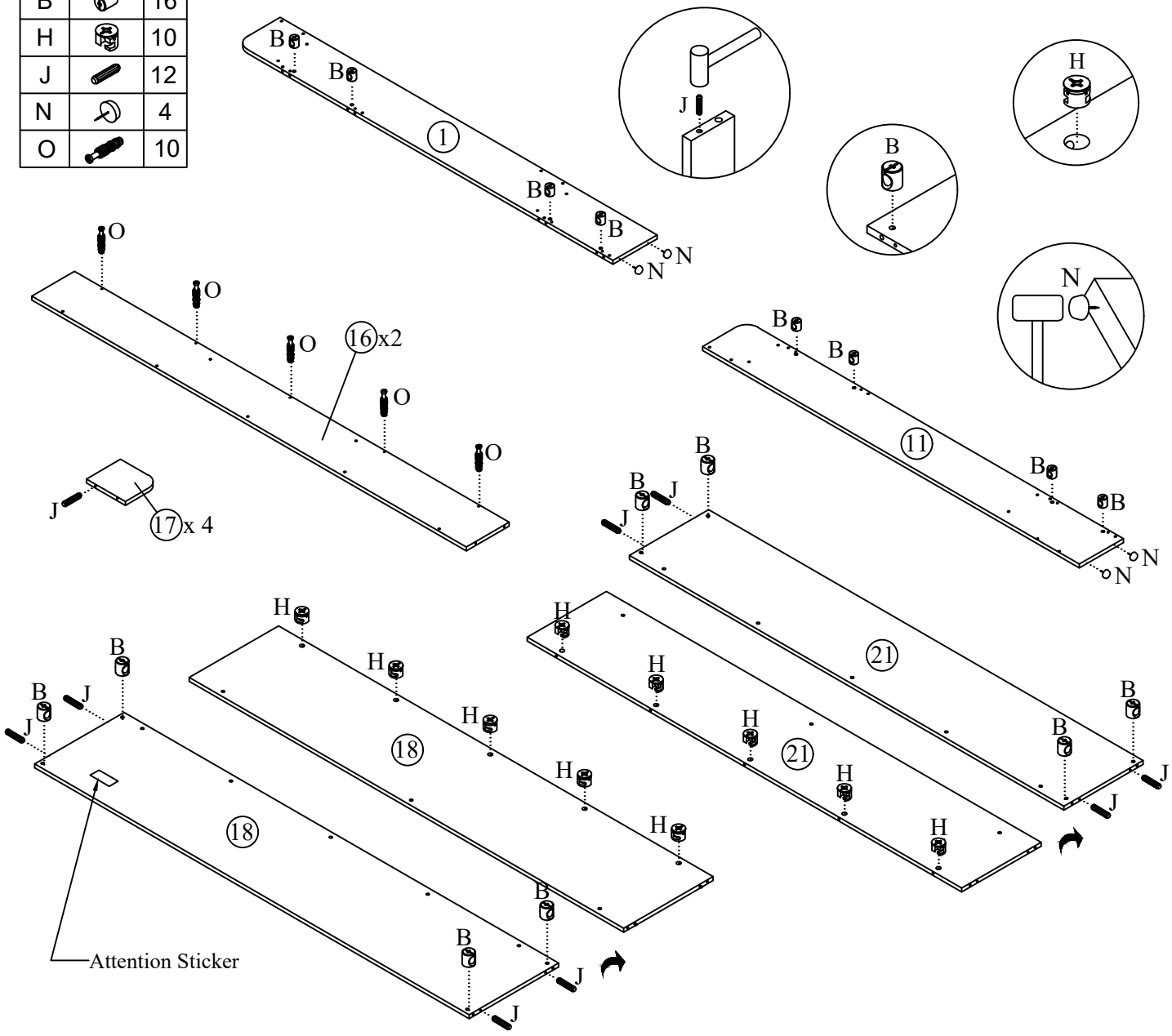

2

A		4

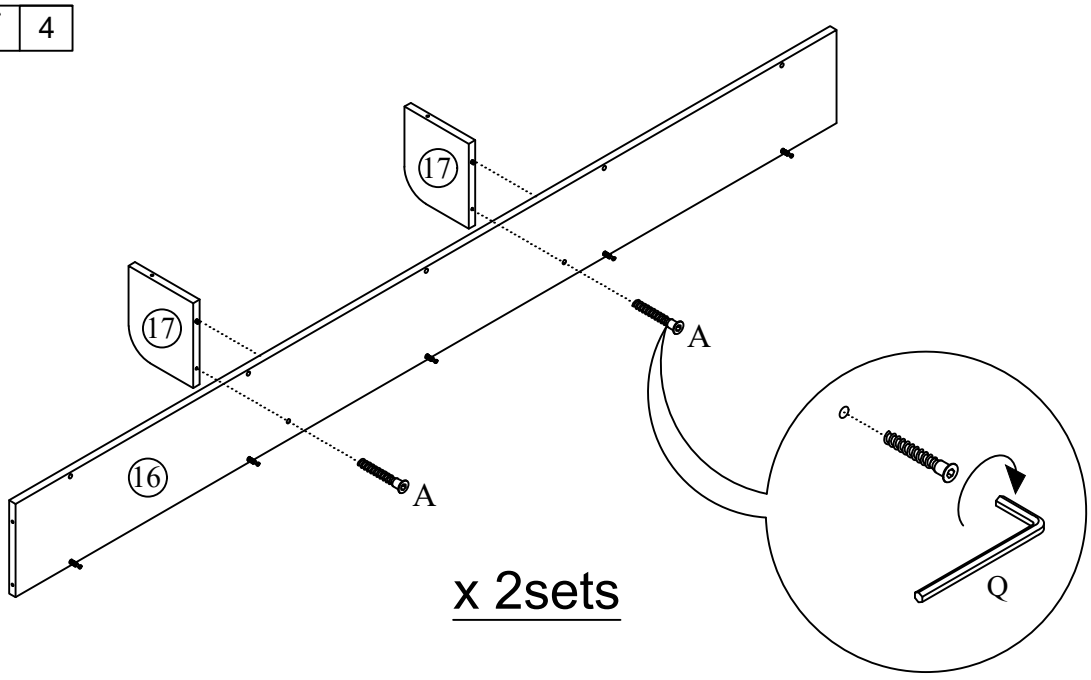

3

A		14

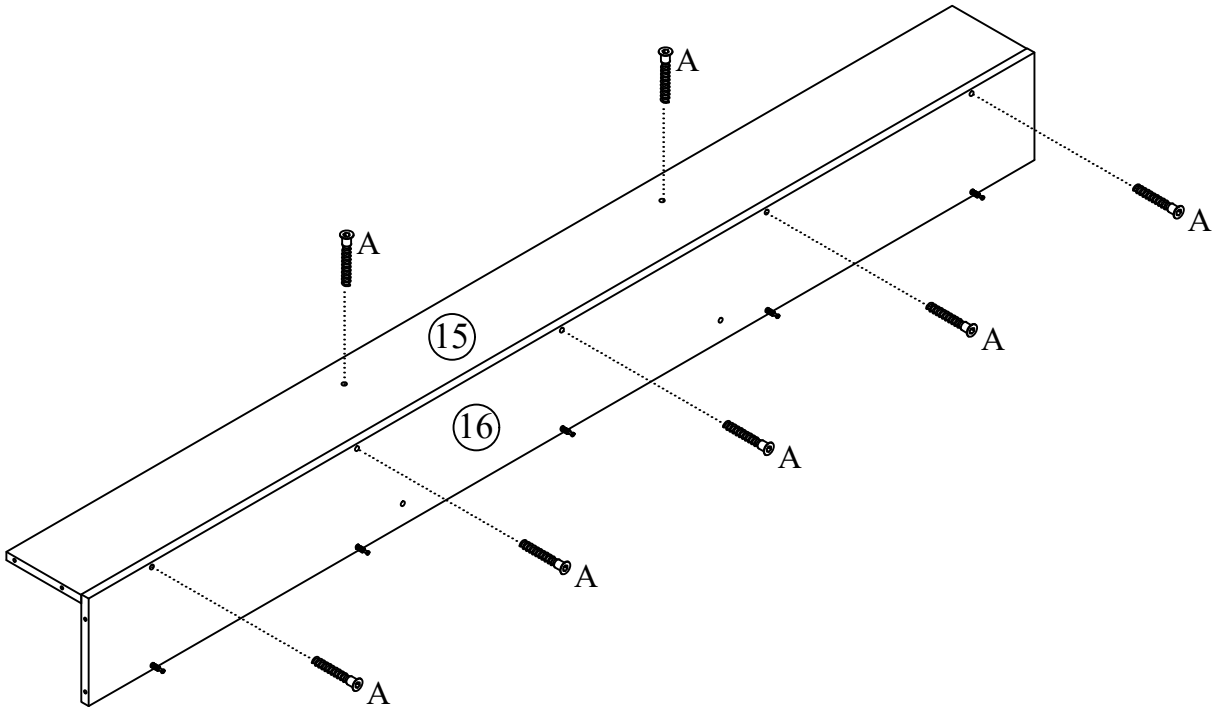

x 2sets

4

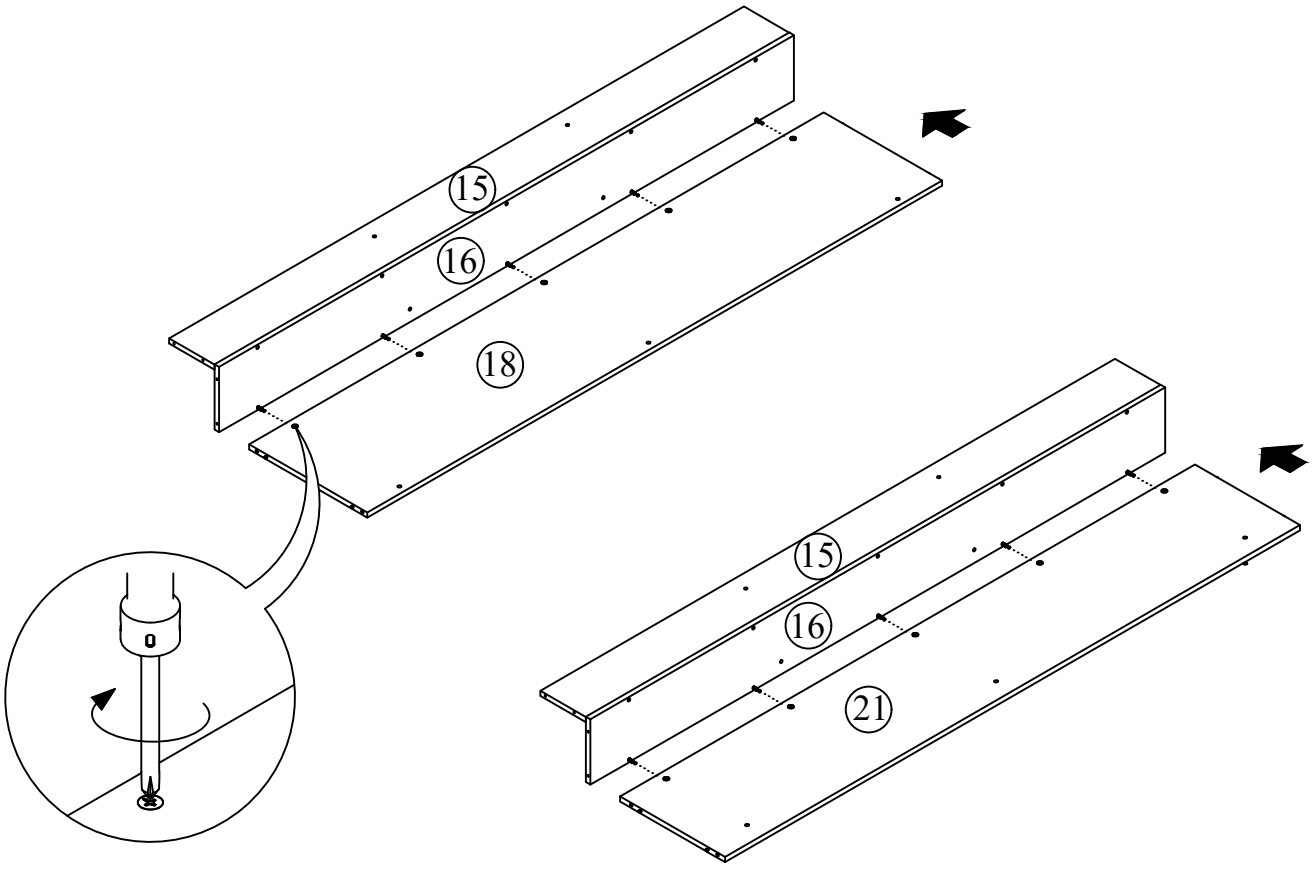

5

A		16

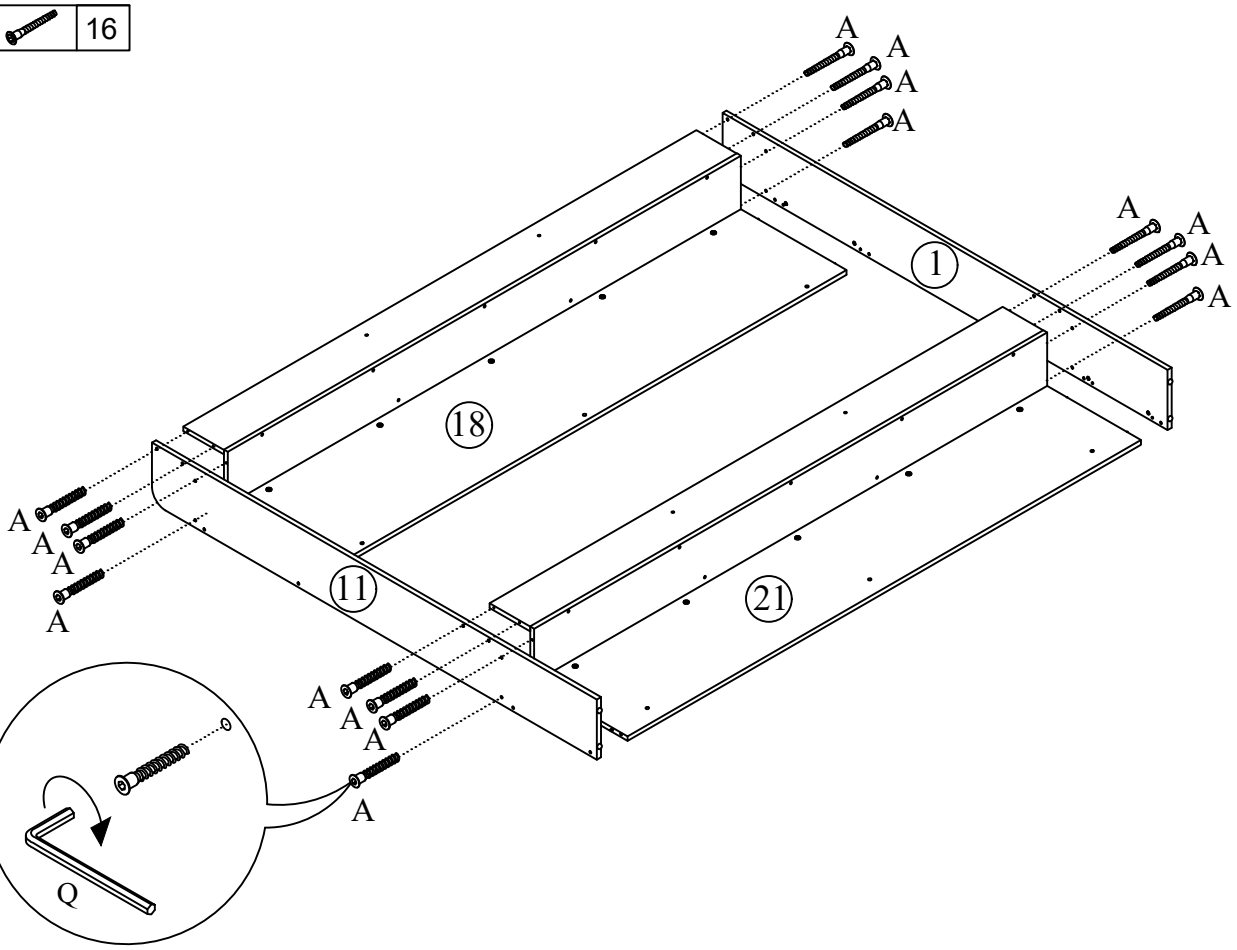

6

C		6
E		6
F		4
G		8
M		8

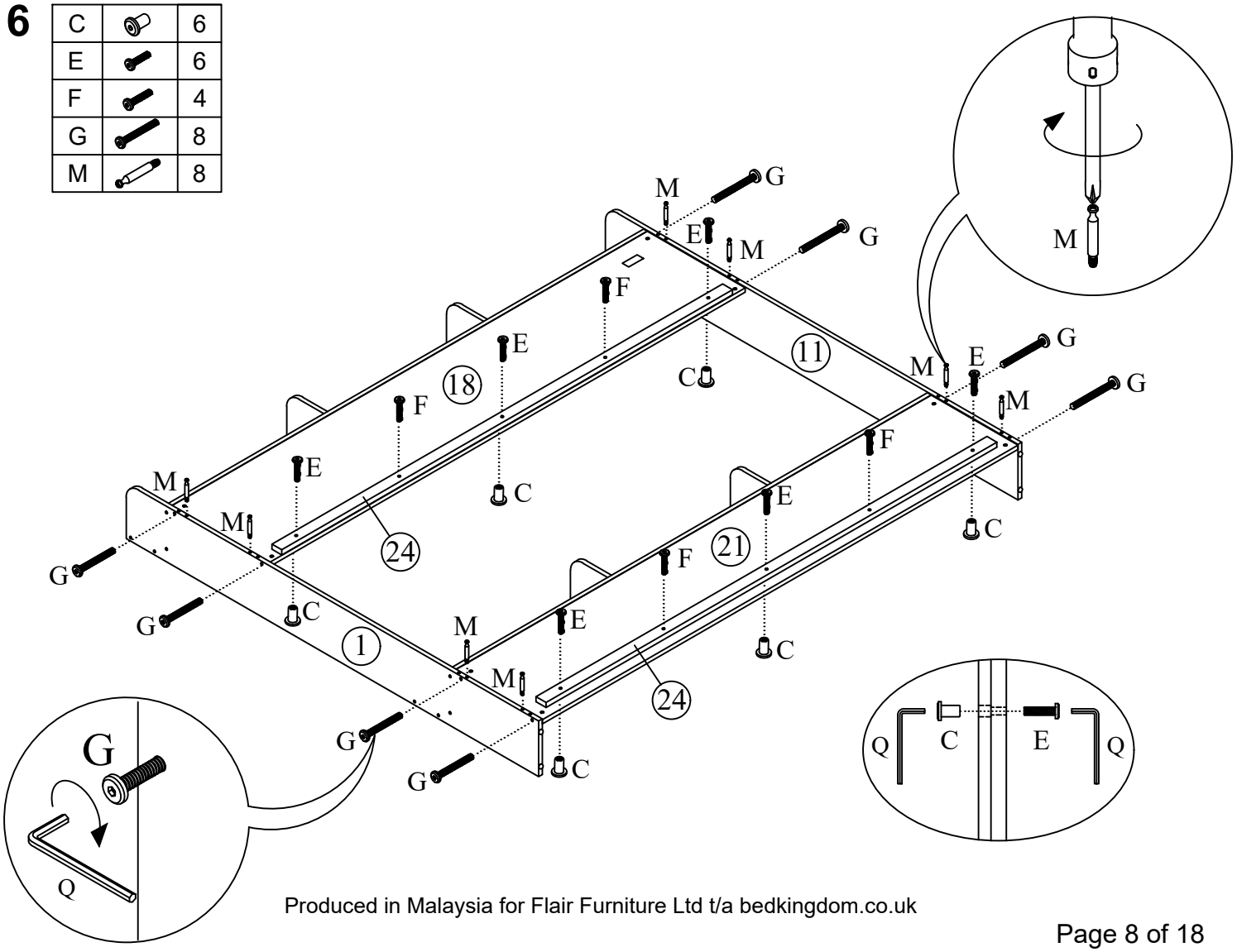

7

B		8
H		16
K		16
N		8

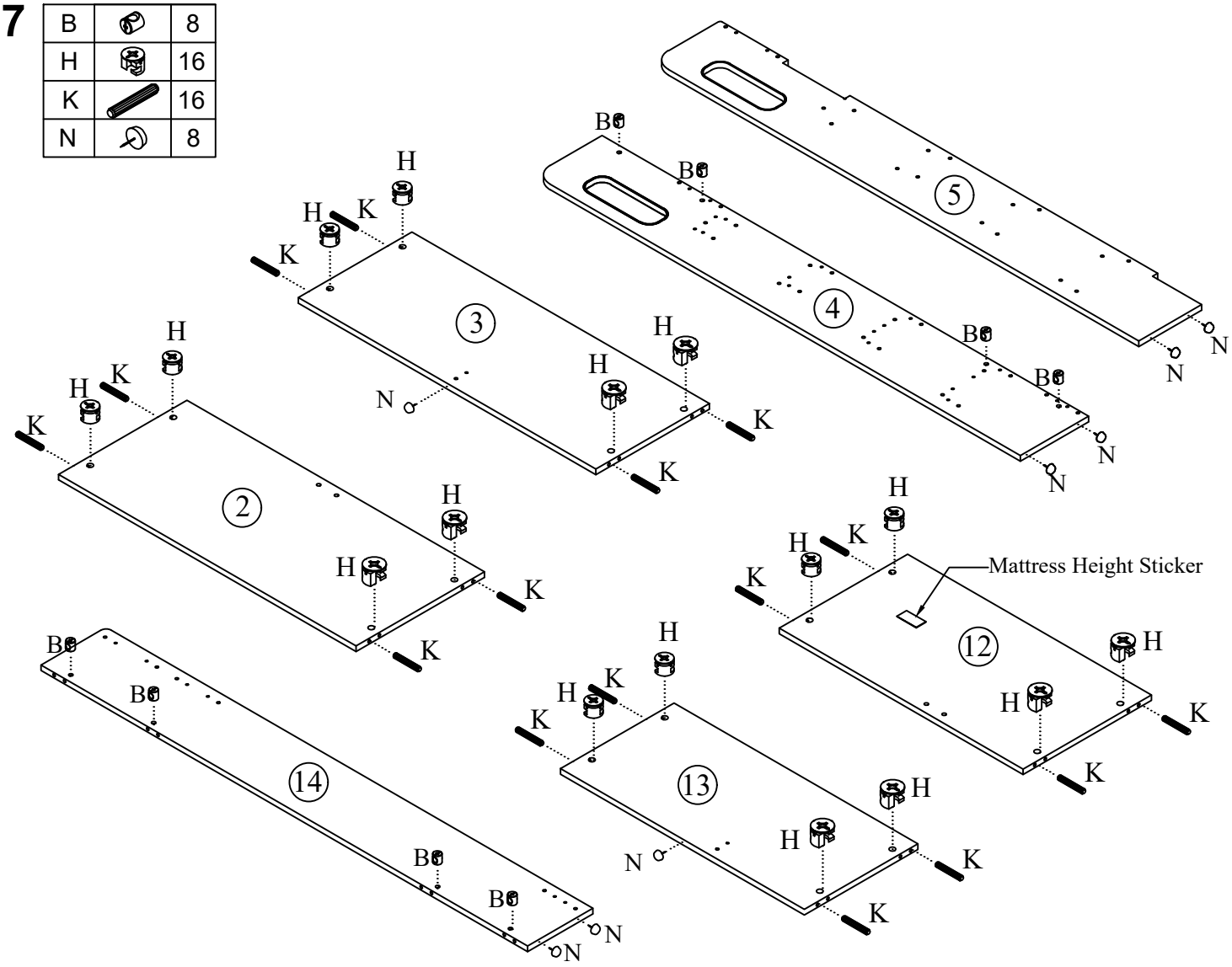

8

M		8

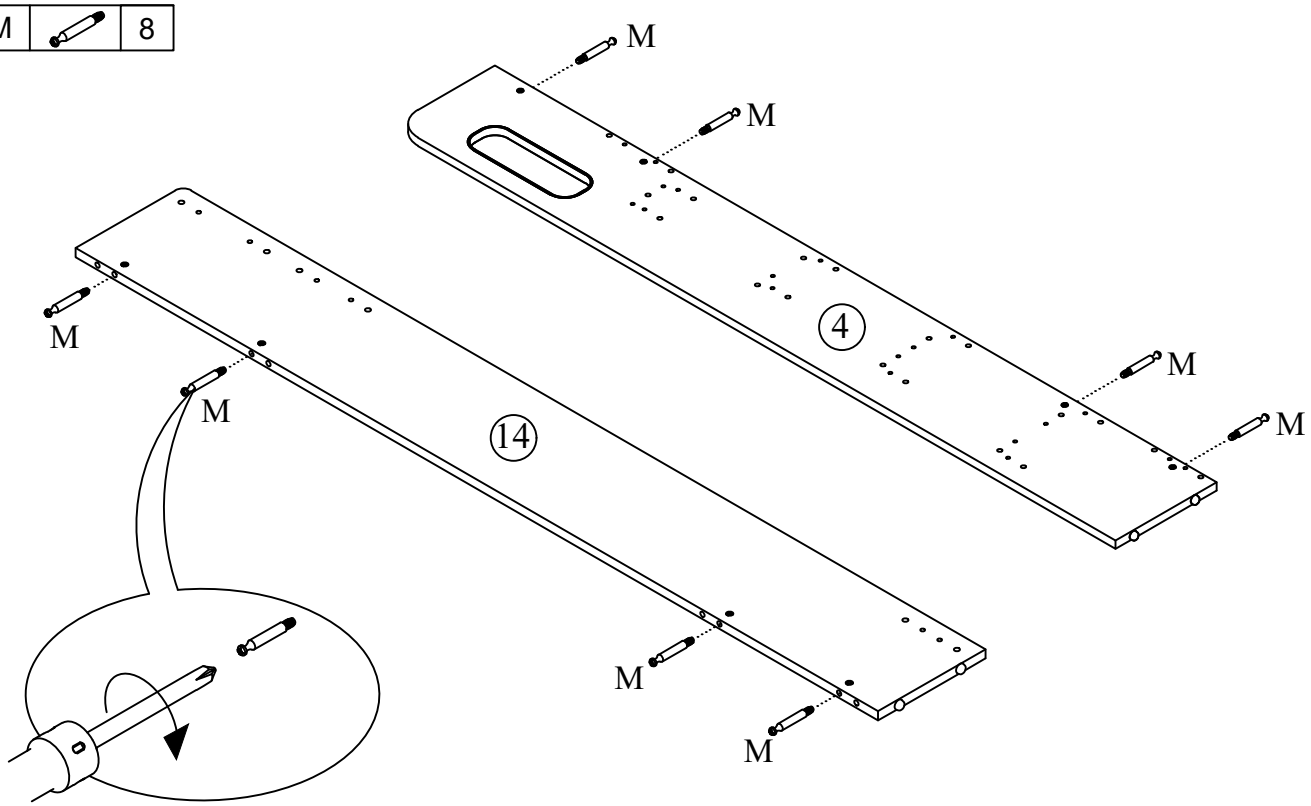

9

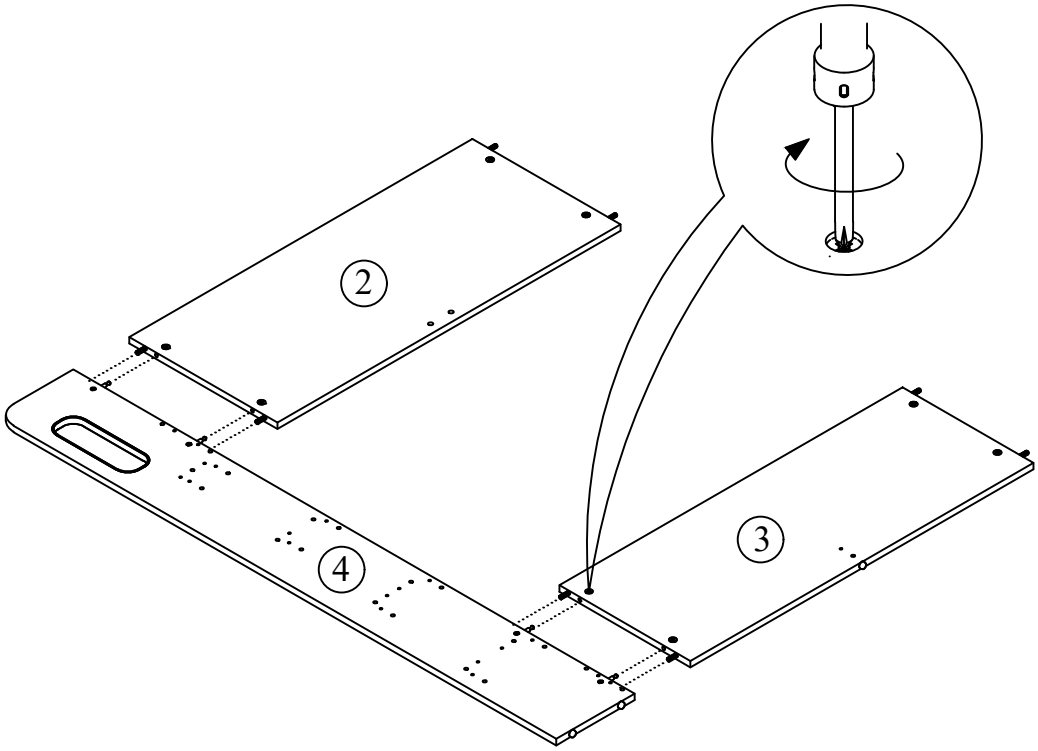

10

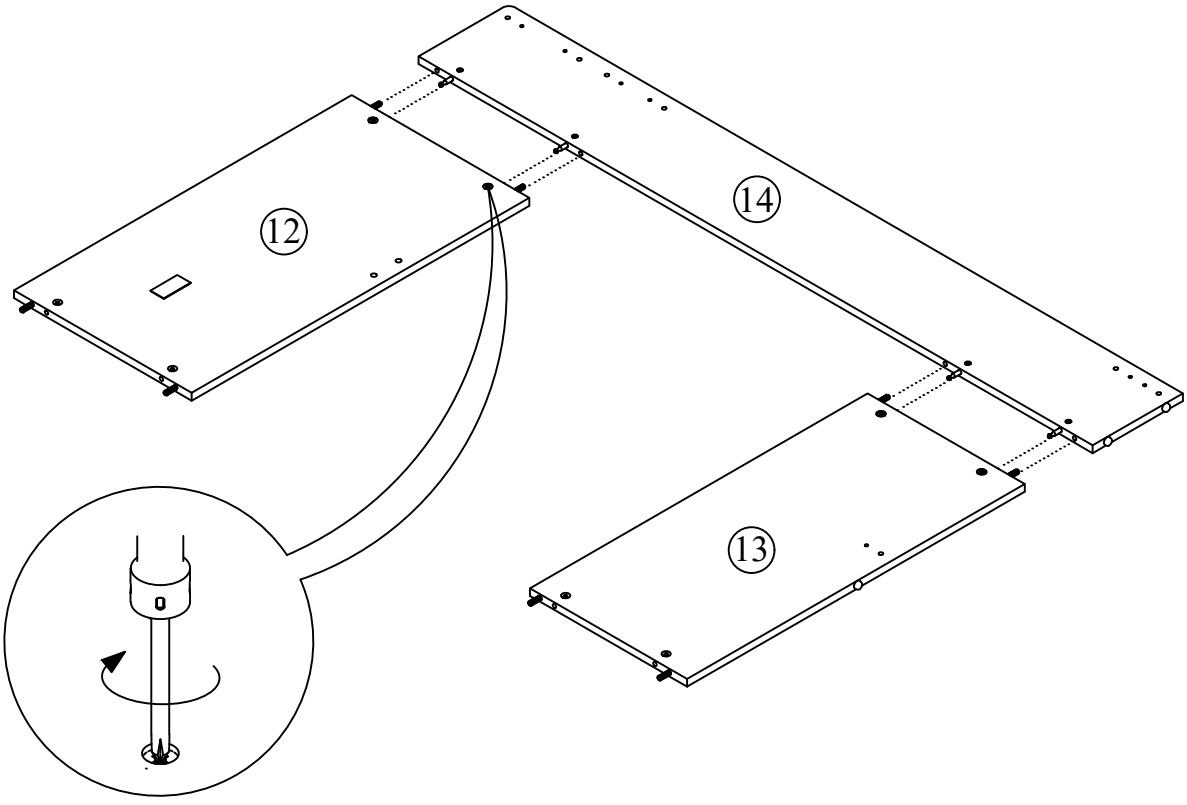

11

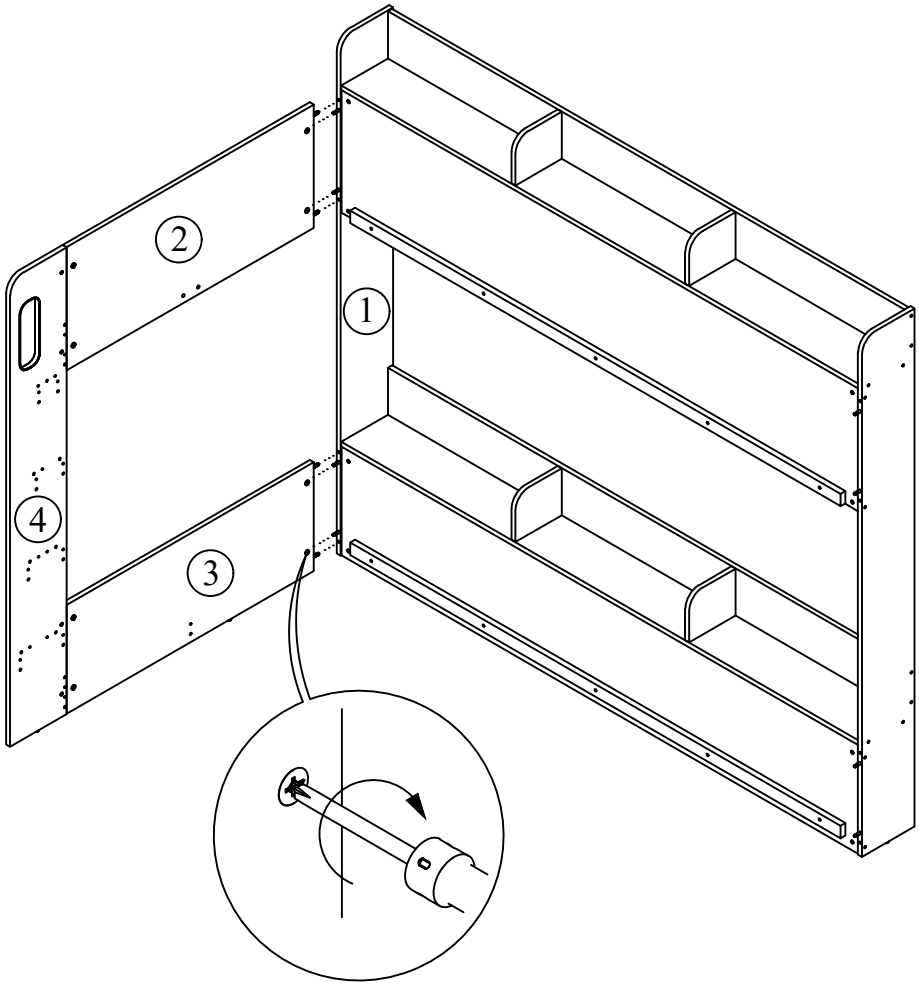

12

B		14
H		12
J		14
K		4

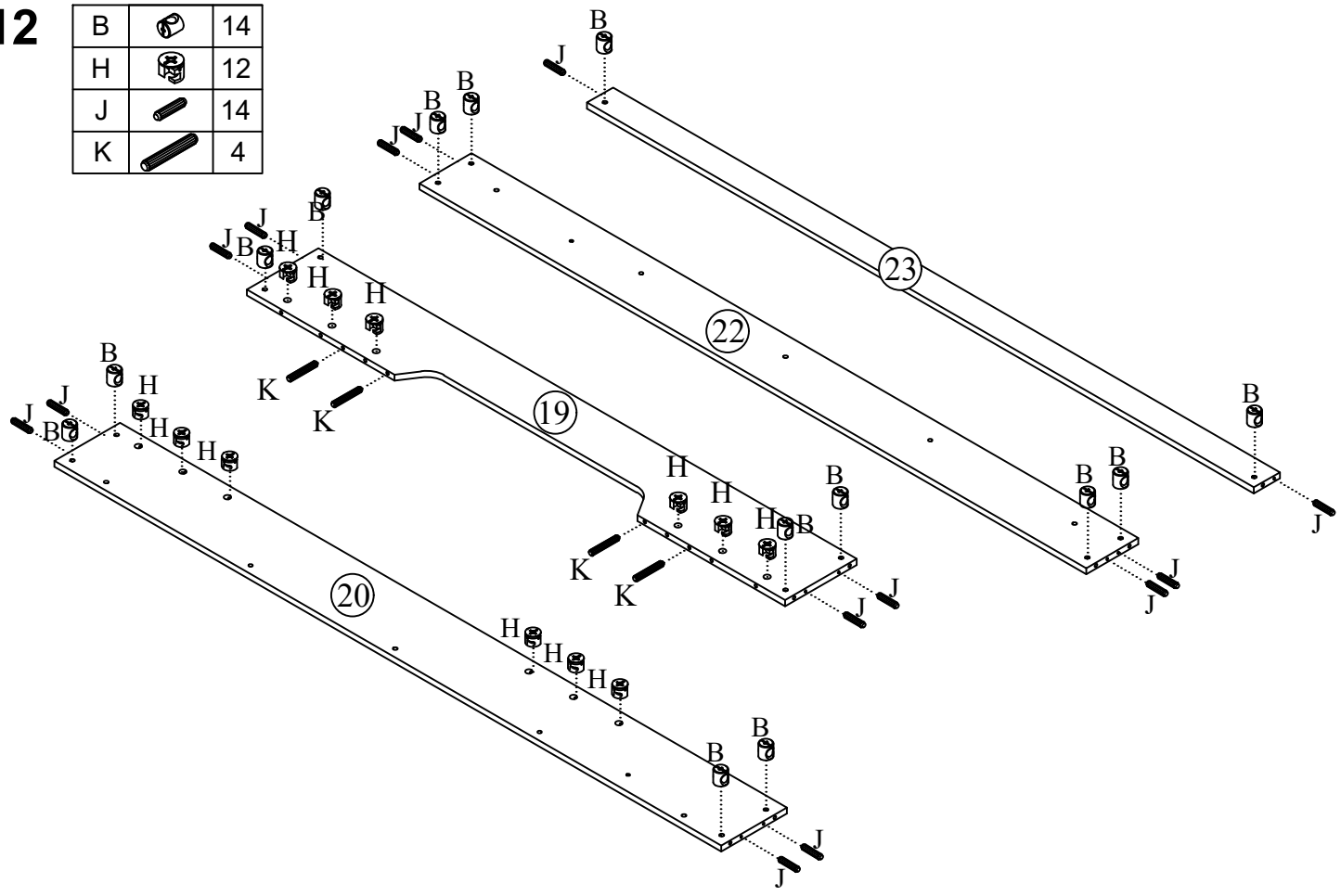

13

I		6

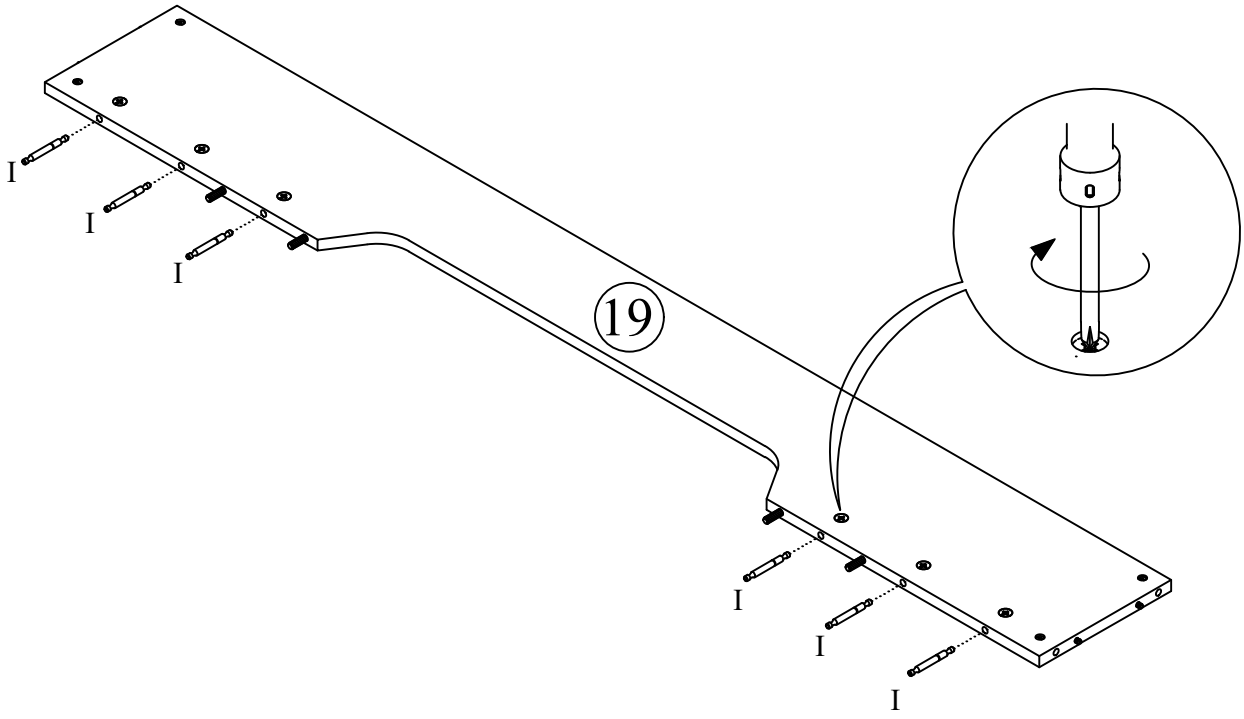

14

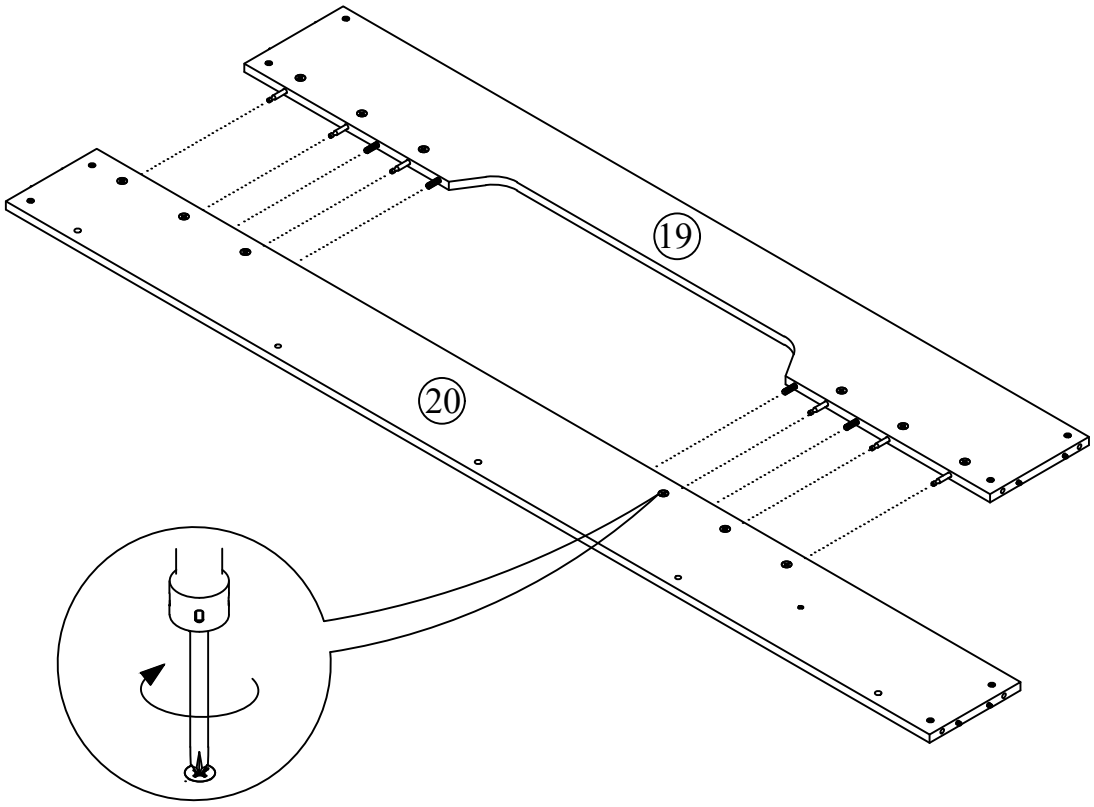

15 G | 5

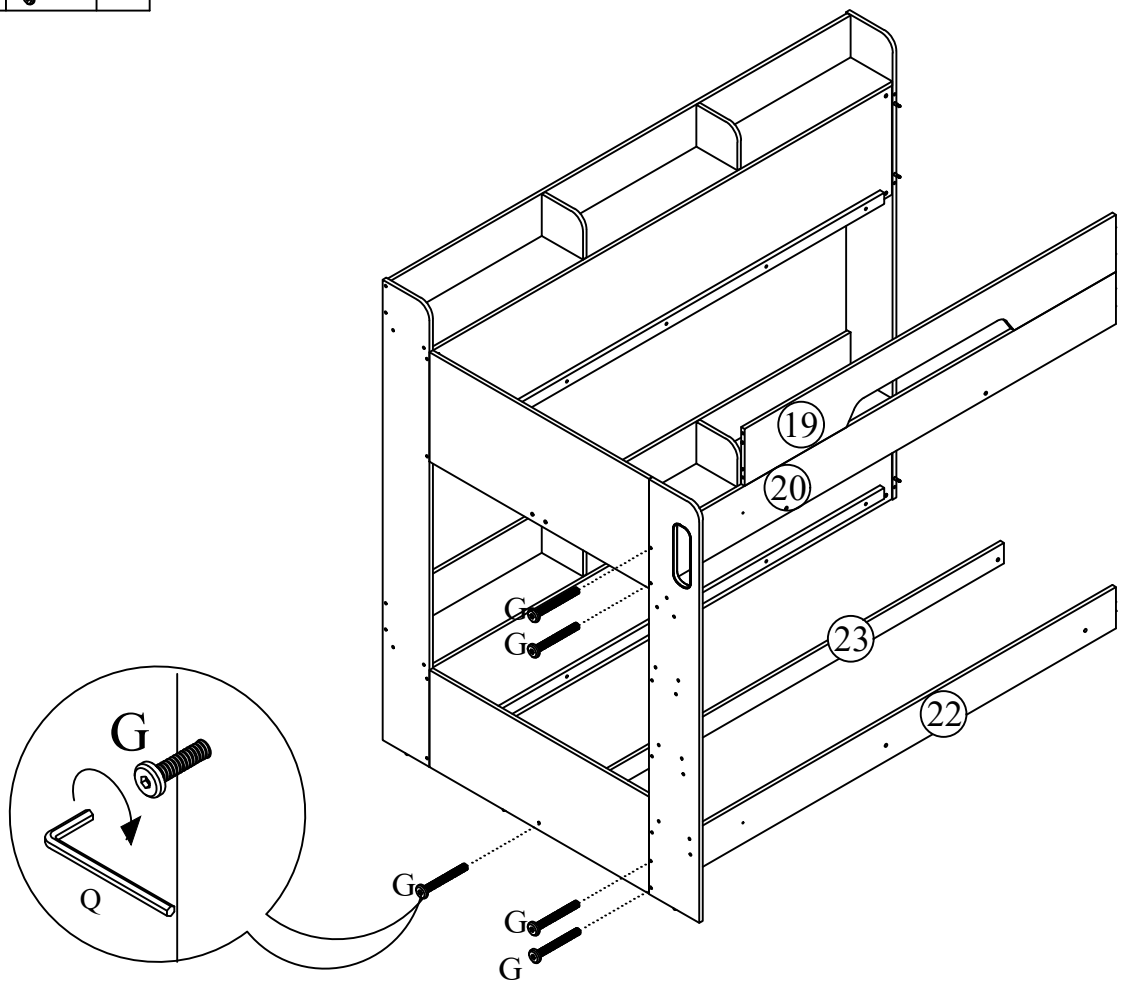

16 G | 7

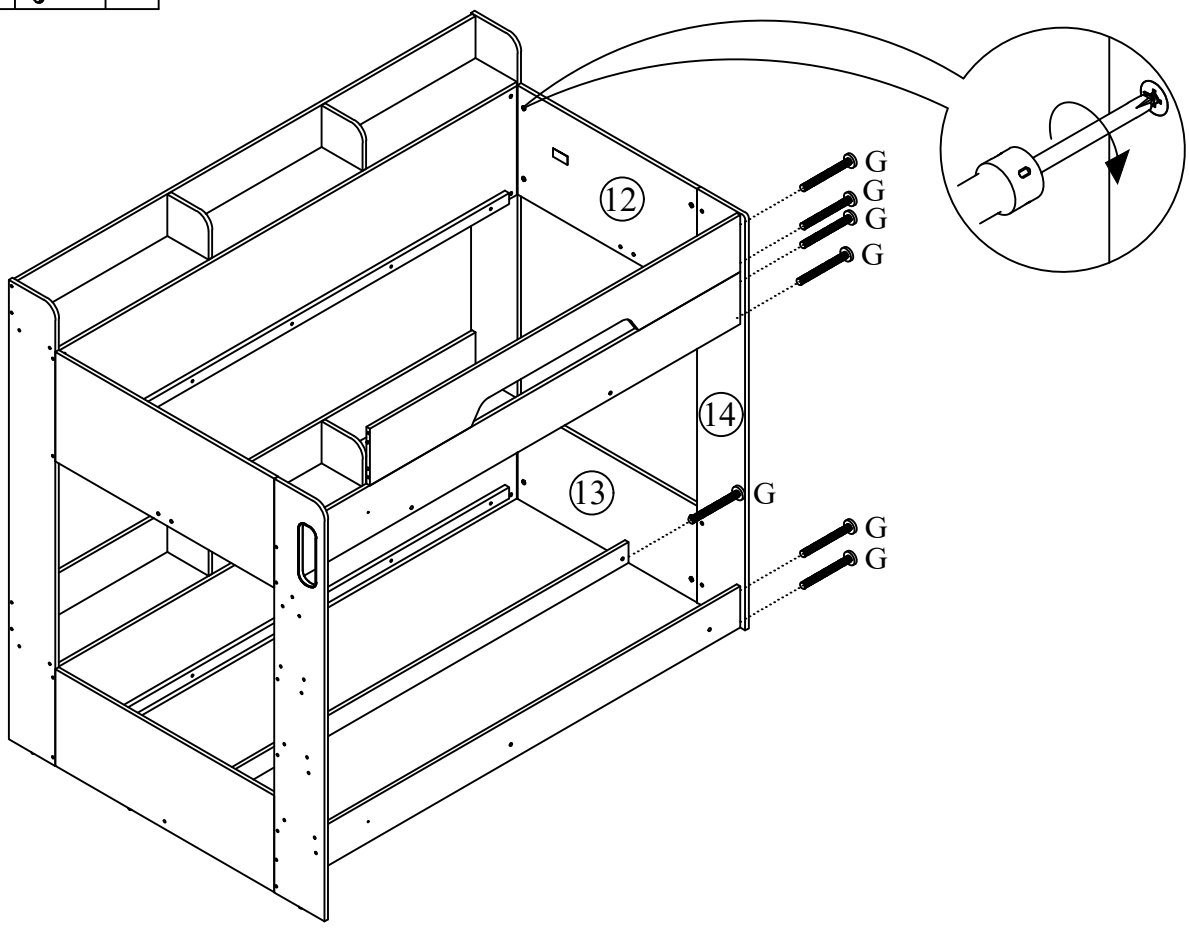

17

J		30

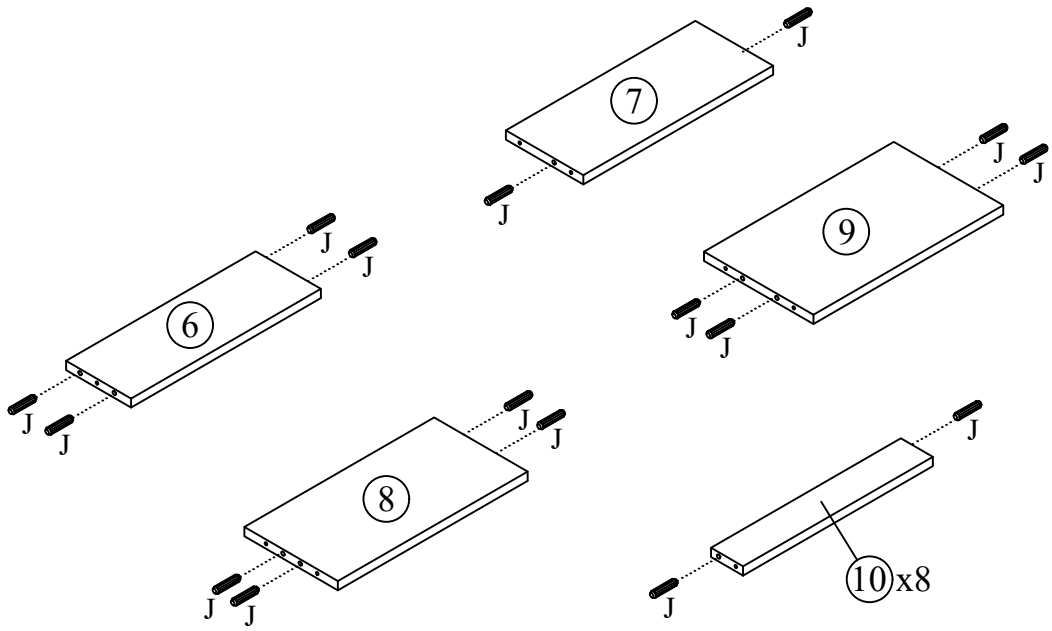

18

A		15

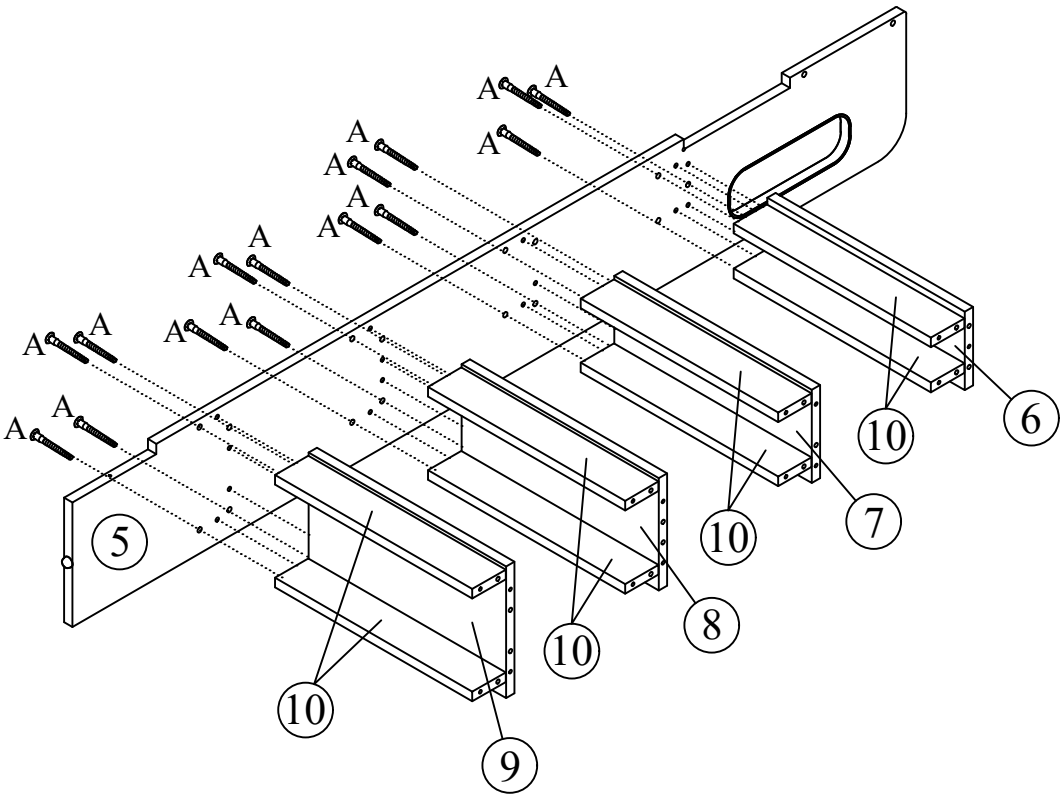

19

A		15
G		2

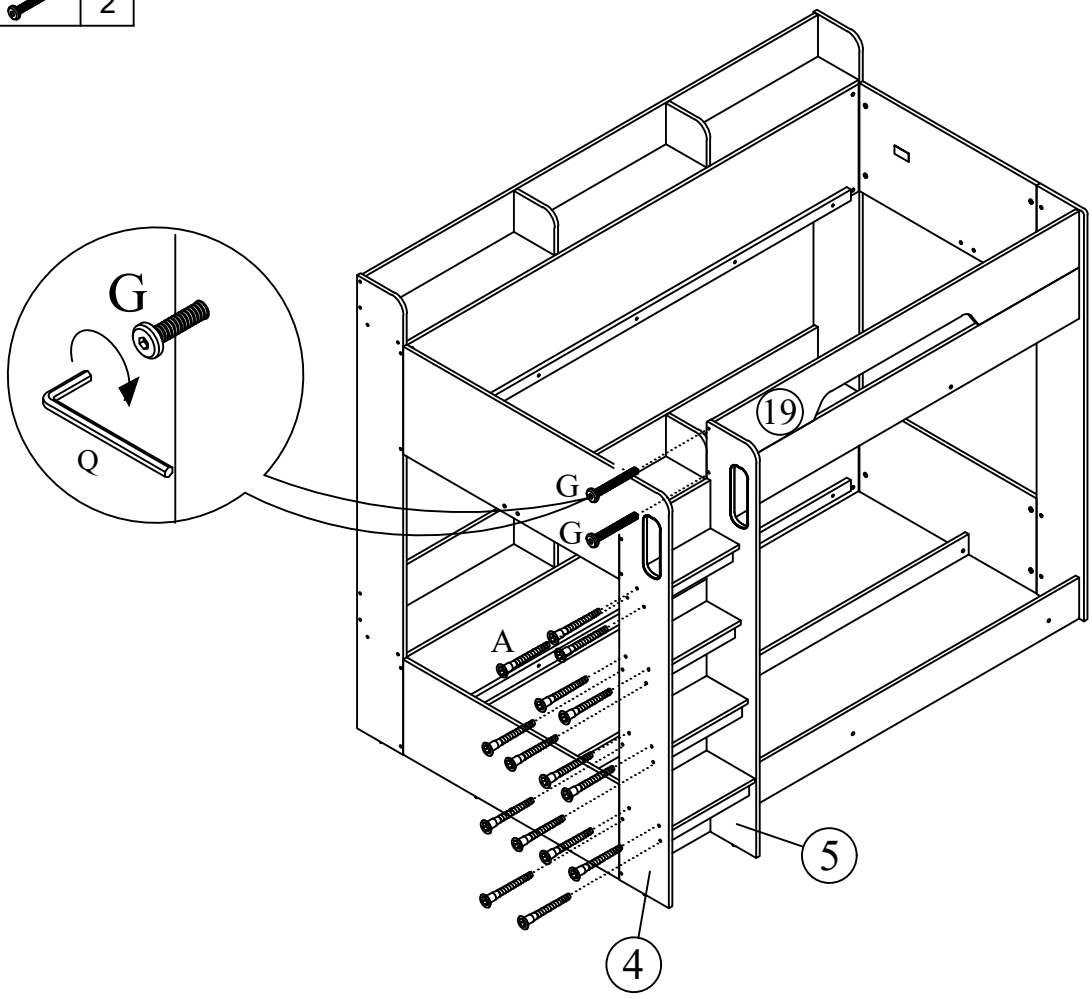

20

P		1
R		1

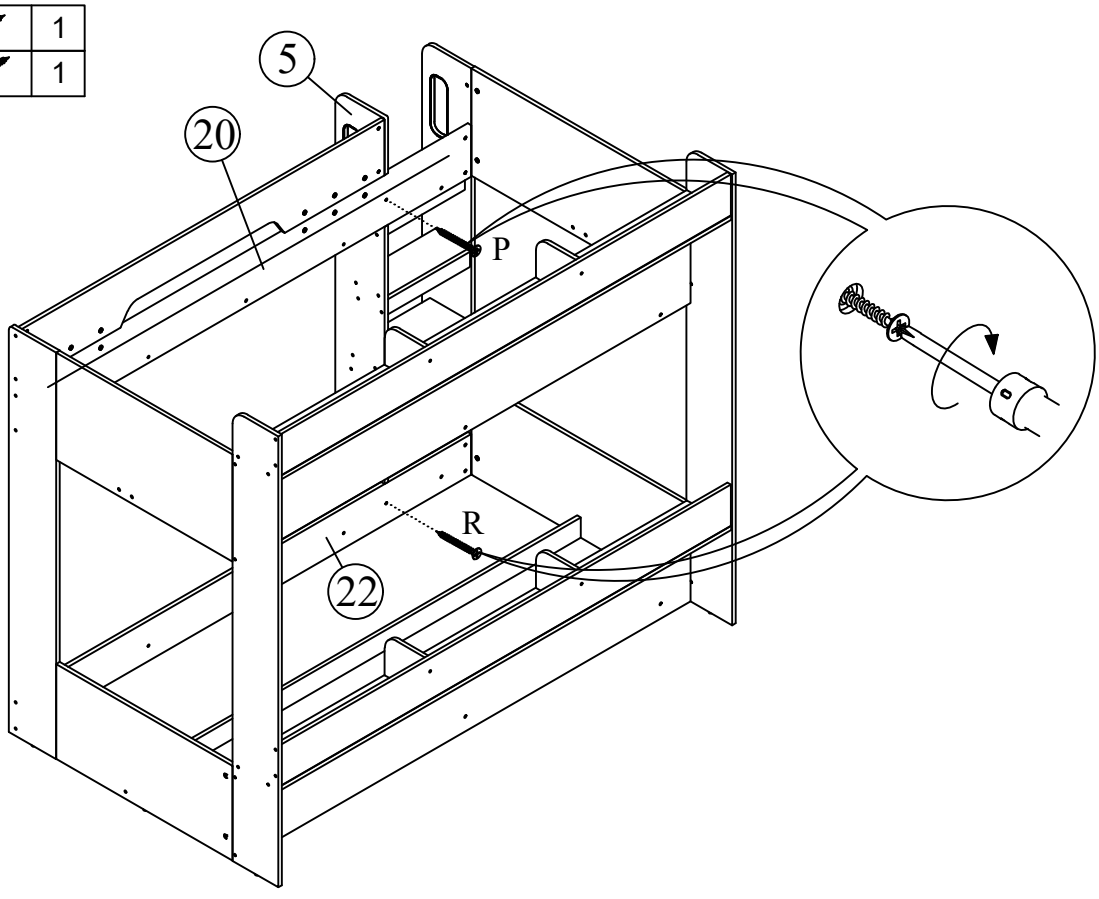

21

C		5
E		5
F		5

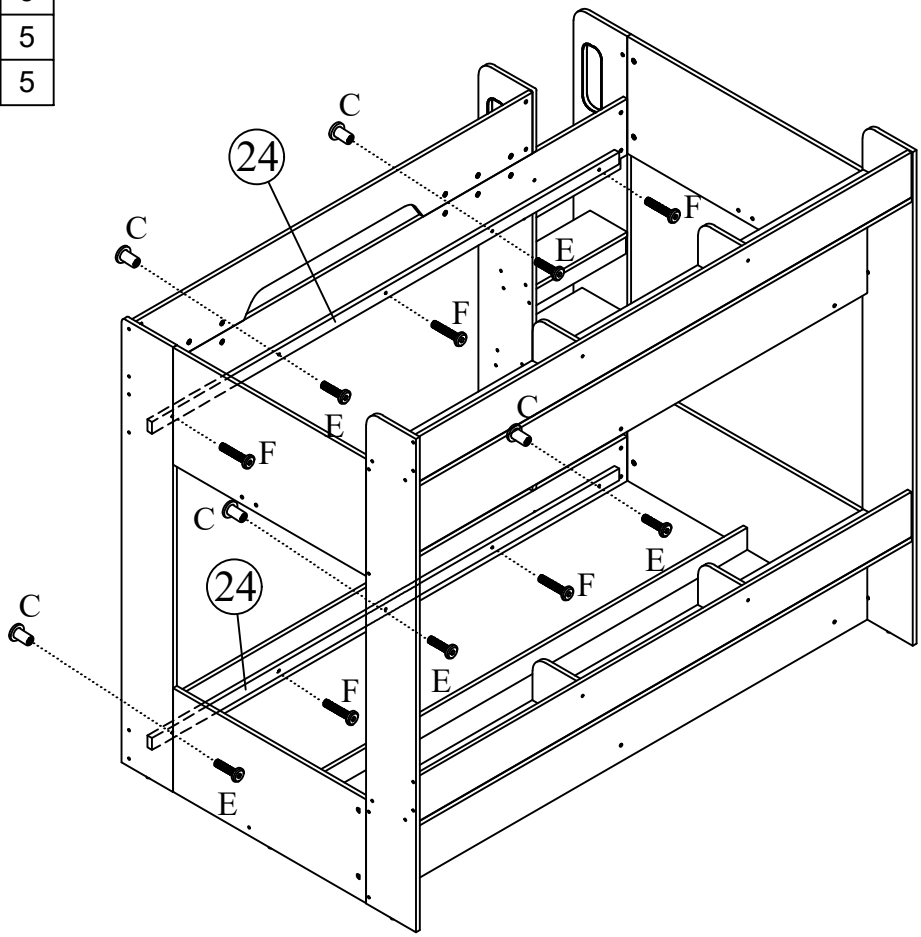

22

C		4
D		4
L		1

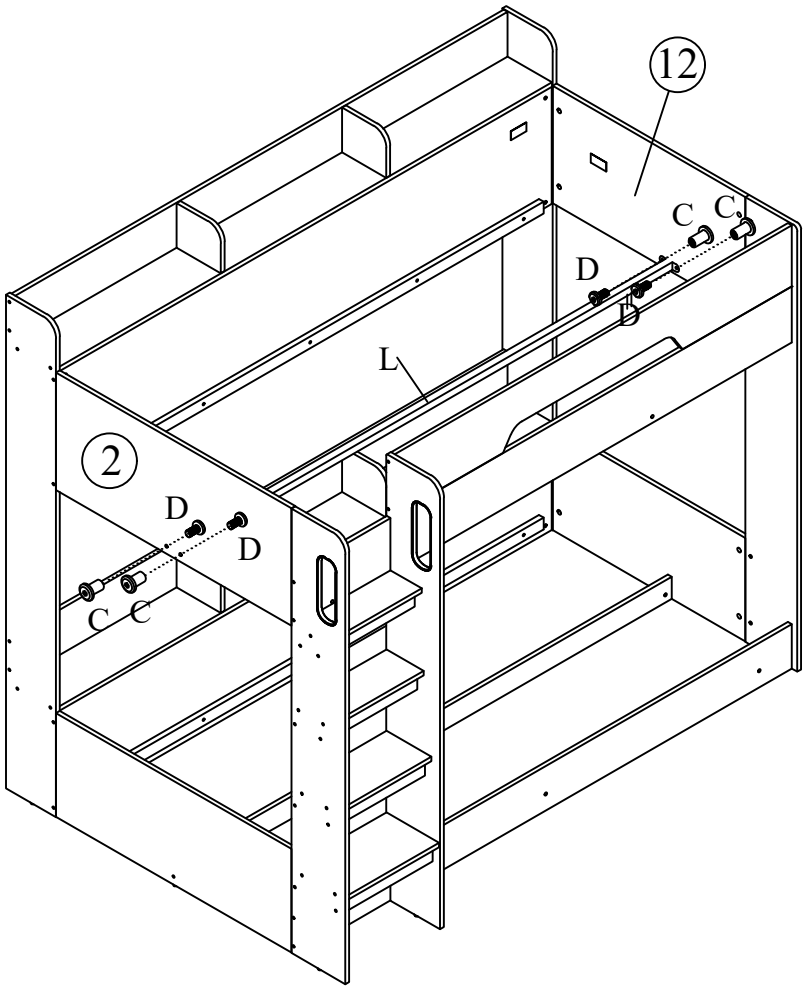

23 P 24

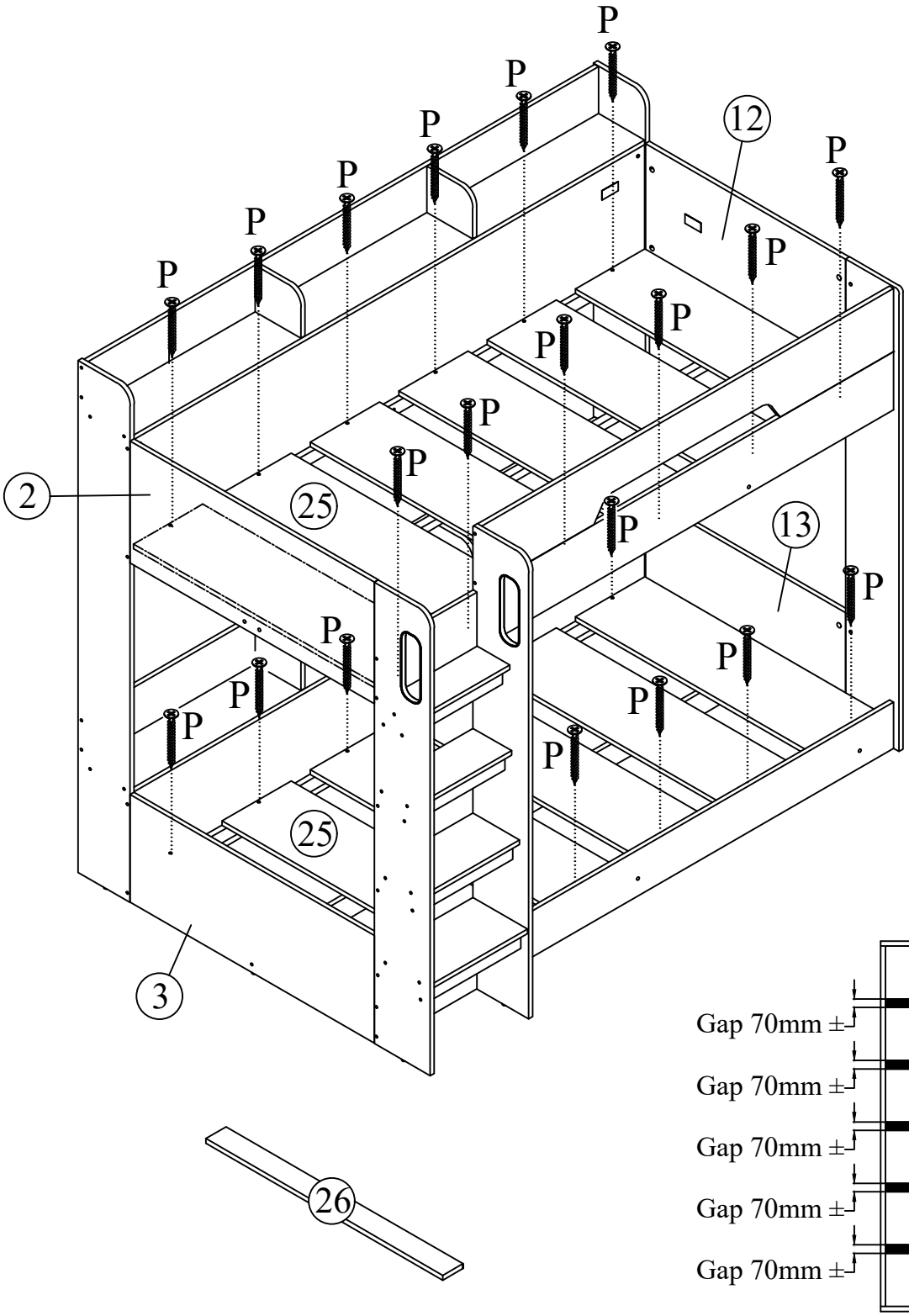

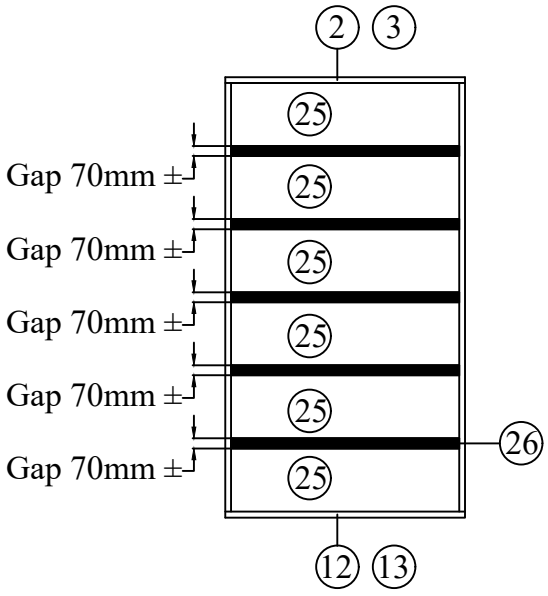

*Use panel (26) as guideline to fix panel (25) as shown.

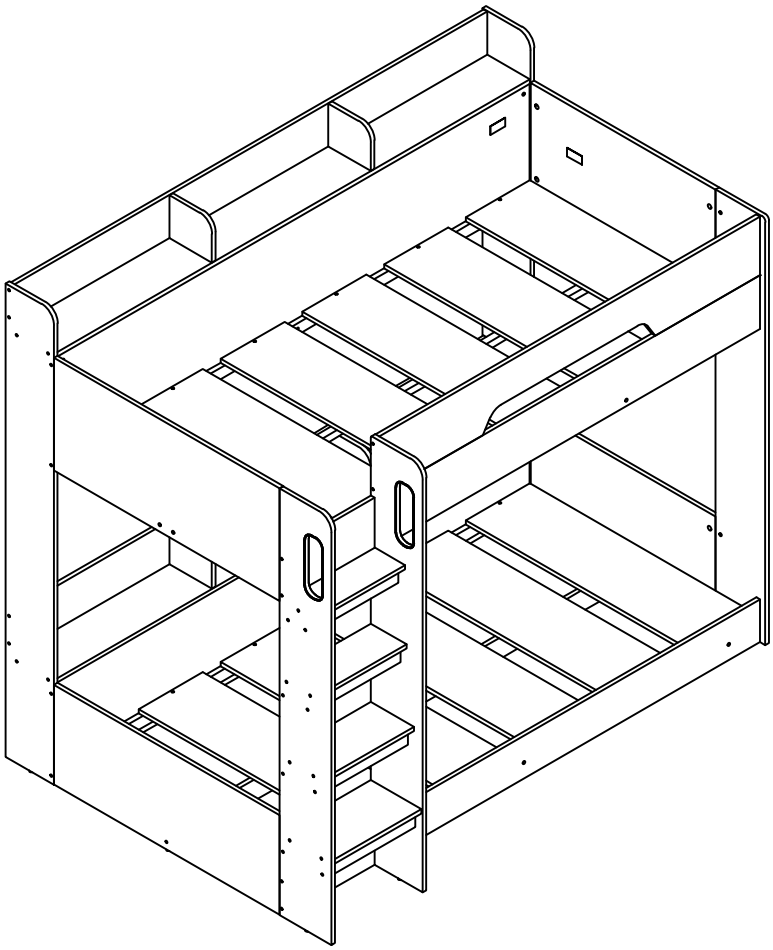

195 x 132.2 x 166.5 cm

Please dispose of packaging safely and responsibly.

Care & Maintenance of Your Product.

- Tighten all screws periodically to guarantee they are secure.
- Clean with a soft, dry or slightly damp cloth.
- Wipe with a soft cloth; mild soap if needed.
- Dry after cleaning.
- Avoid abrasive pads and strong chemicals.
- Avoid excessive moisture.
- Protect from heat and sharp objects.
- Use protective pads for hot items.
- To move the product lift it into place. Pushing or dragging the product across a floor will cause damage to it.

  If these guidelines are not followed it may invalidate the warranty.
- Note. This product has been designed to be as easy to assemble as possible. In the event that you run into issues putting the bed together or have damaged / missing pieces, please contact us:

FOR PARTS & TECHNICAL SUPPORT VISIT:
Telephone:
01924950108
Email Address:
support@bedkingdom.co.uk

Manufacturer
Flair Furnishings Ltd t/a Bedkingdom,
Old Delivery Office, Oldfield Lane,
Heckmondwike, England, WF16 0JD
support@bedkingdom.co.uk
01924 950108

Flair Furniture Ireland Ltd
20 Harcourt Street
Dublin
DO2H364
help@bedkingdom.ie

Produced in Malaysia for Flair Furniture Ltd t/a bedkingdom.co.uk