IMPORTANT! KEEP FOR FUTURE REFERENCE

SOLACE+CO

SOLEIL GARDEN PARASOL

Assembly Instructions

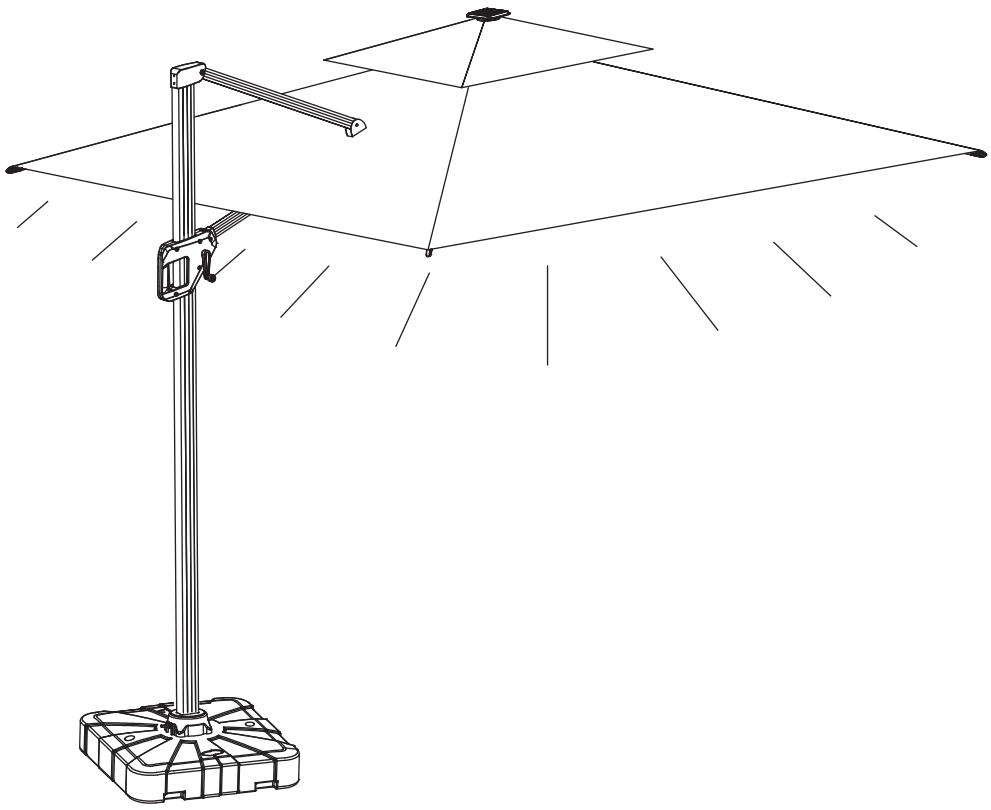

FOR PARTS & TECHNICAL SUPPORT VISIT:

Telephone: 01924950108

Email Address: support@bedkingdom.co.uk

Manufacturer:	FLAIR FURNITURE LTD	EU REP	Contact Information:	eucomply OÜ
Address:	Oldfield Ln, Heckmondwike WF16 0JD		Address:	Pärnu mnt 139b-14 11317 Tallinn, Estonia
Contact Information:	support@bedkingdom.co.uk 01924950108		Contact Information:	hello@eucompliancepartner.com +3375690241

⚠ WARNING: Contains small parts -choking hazard.

⚠ WARNING: Plastic packaging may cause suffocation. Keep away from babies and young children.

⚠ WARNING: Keep away from open flames and other heat sources.

⚠ WARNING: Ensure adequate airflow and ventilation at all times to prevent airway obstruction.

⚠ WARNING: Never leave a child unattended in a stroller with this product. Strangulation hazard may occur.

⚠ WARNING: Ensure all attachments are secure before use. Do not use if parts are loose or damaged.

2 Person assembly recommend

45 min (Approx) Set Up

Outdoor Furniture Using Instruction

The best way to extend the life of your outdoor furniture is by cleaning it regularly and not leaving it outdoors unprotected more than necessary.

- If possible, store in a cool dry place indoors.
- If the furniture is stored outside, cover it with a waterproof cover.
- After a rain or snowfall, wipe off excess water or snow from flat surfaces.
- Allow air to circulate to avoid condensation.
- Make sure the cushion is completely dry before storing it away in a storage bag or storage box.

DETAIL VIEW

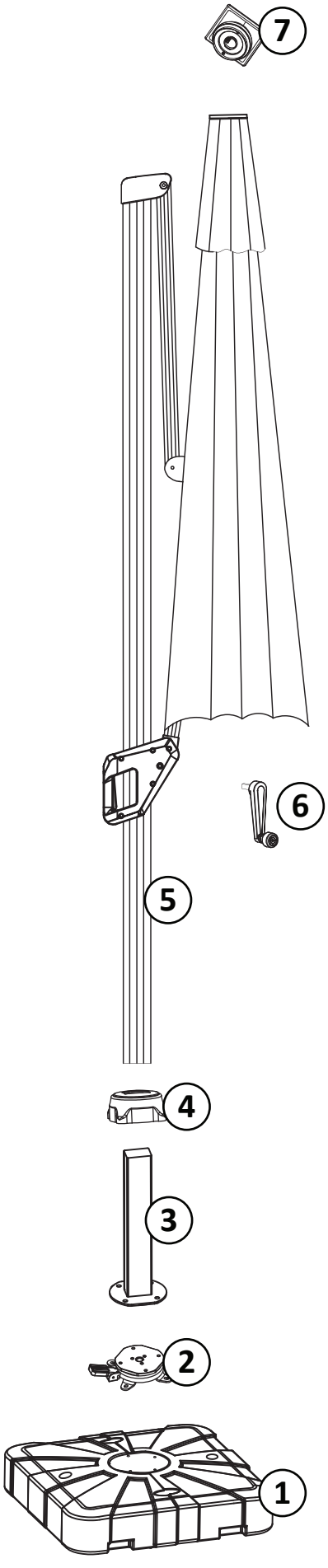

Parts List

No.	Part Name	Pcs	No.	Part Name	Pcs
①	Base 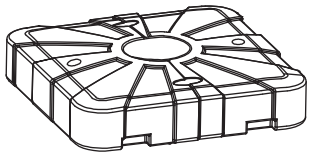	1	②	Connector 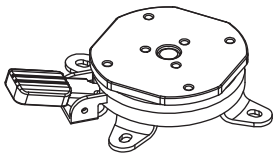	1
③	Metal Stand 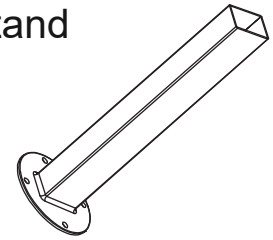	1	④	Connector 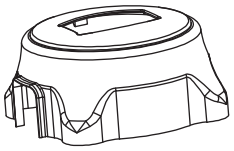	1
⑤	Parasol 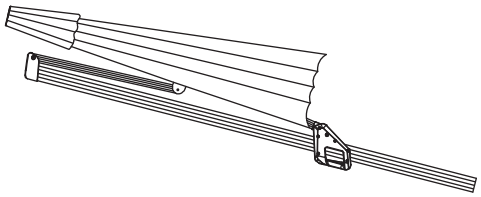	1	⑥	Adjustable Level Tool	1
⑦	Top Cover 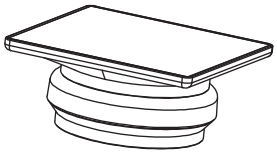	1			

Hardware

A	B	C	D	E
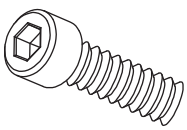 M8 8 PCS	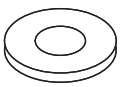 M8 8 PCS	1 PC	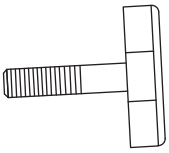 1 PC	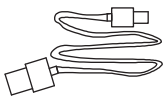 1 PC

1

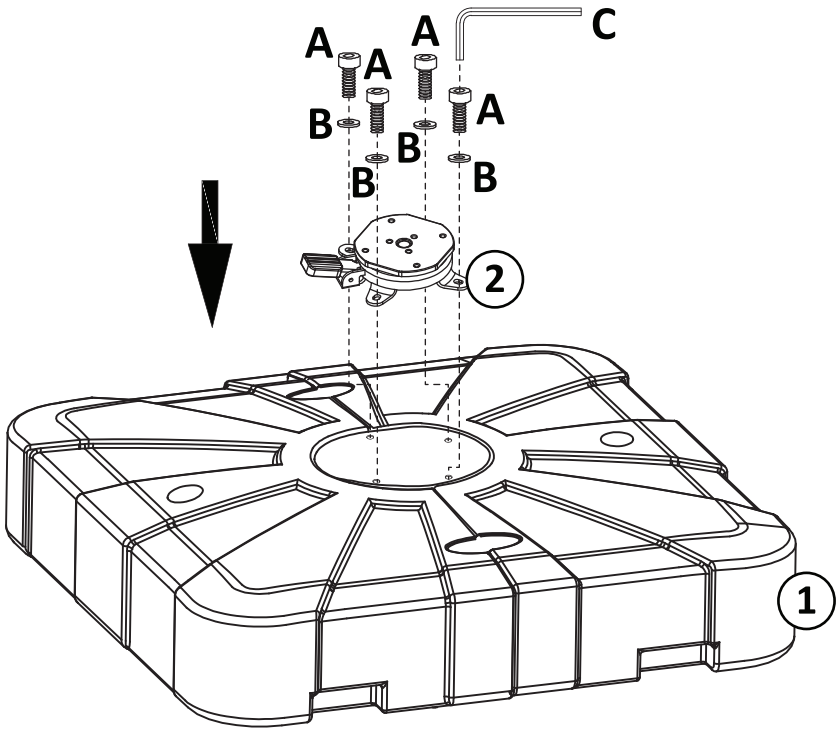

A		4
B		4
C		1

2

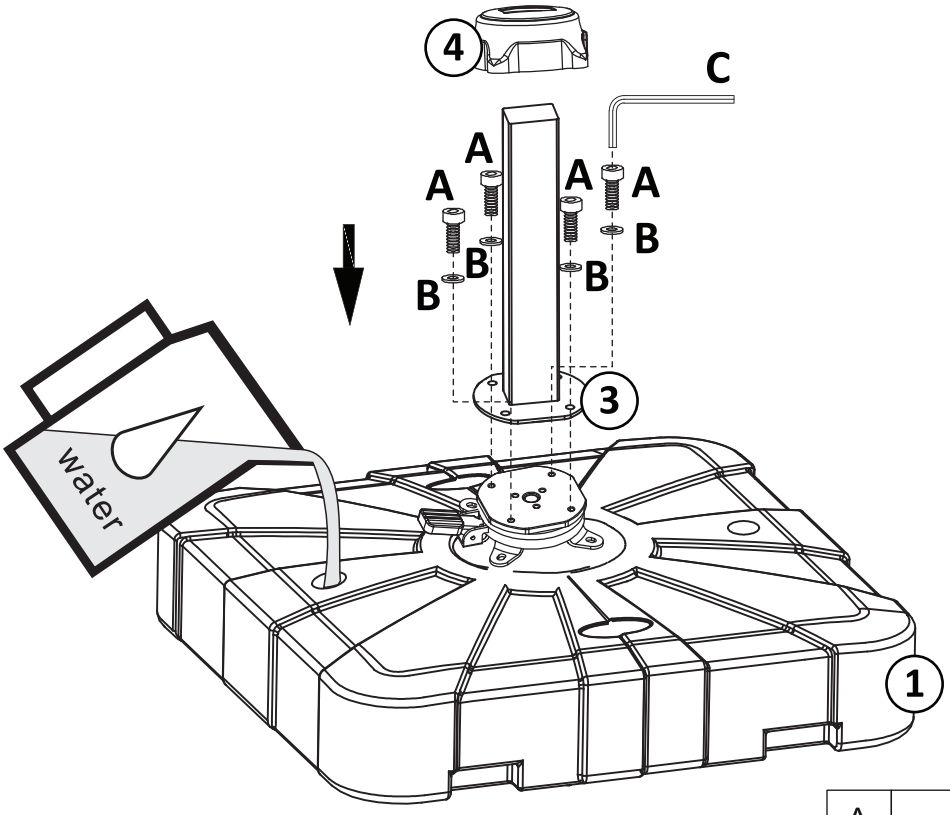

A		4
B		4
C		1

3

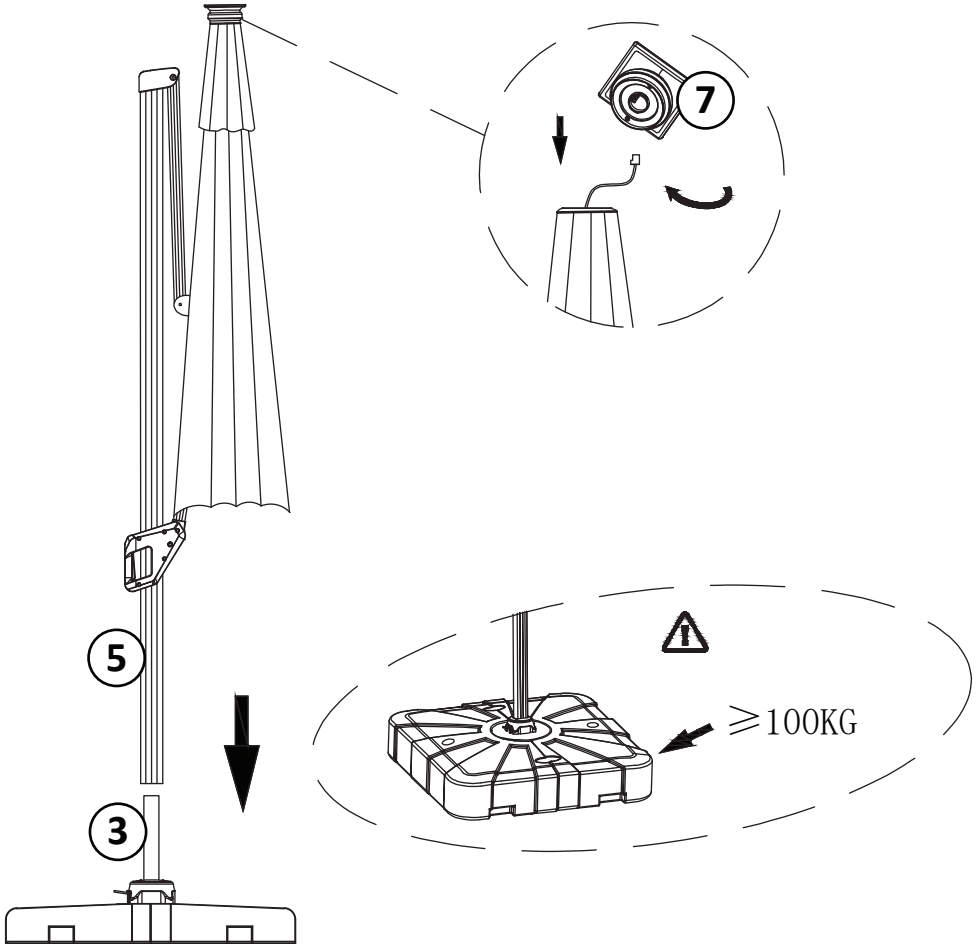

4

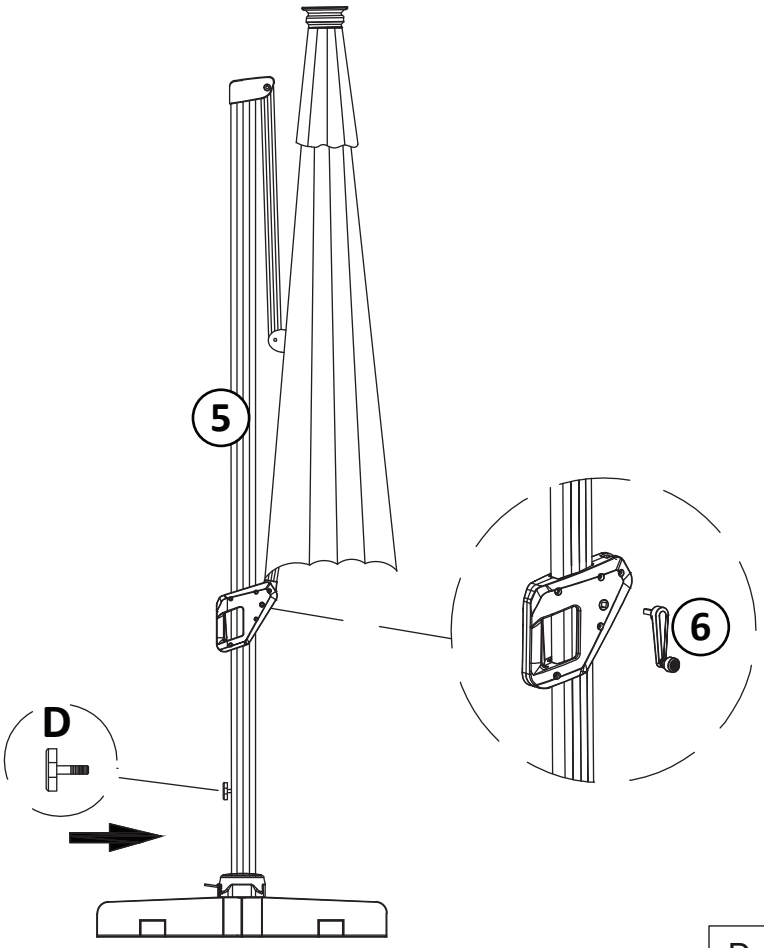

D		1

3

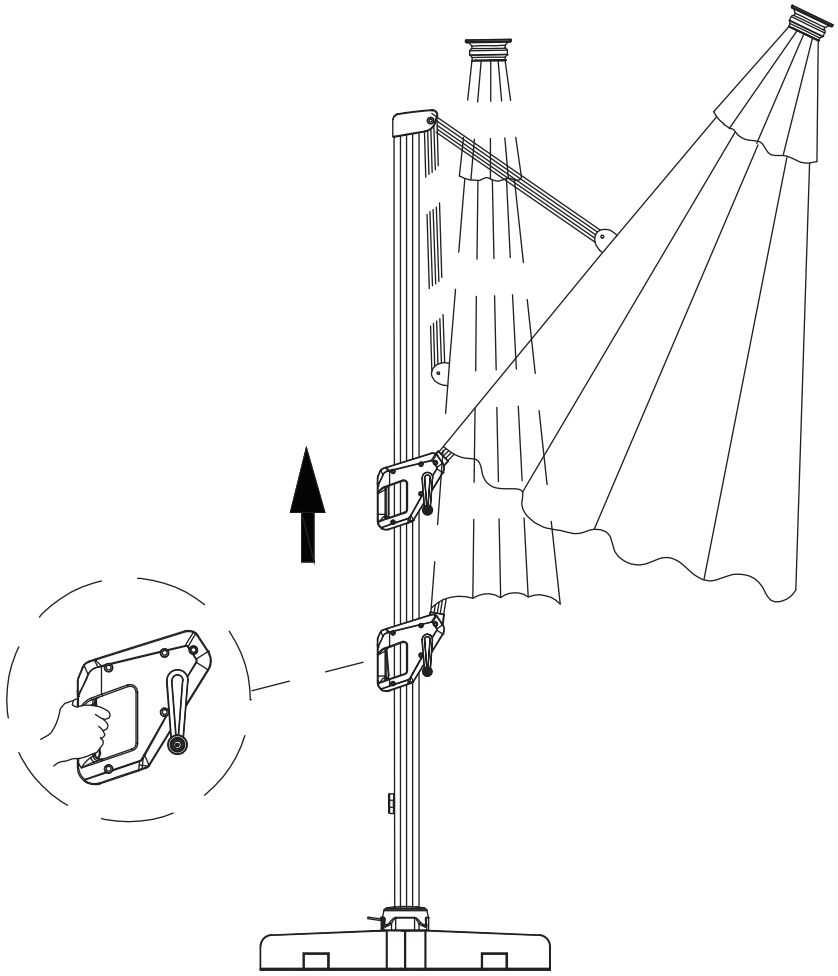

4

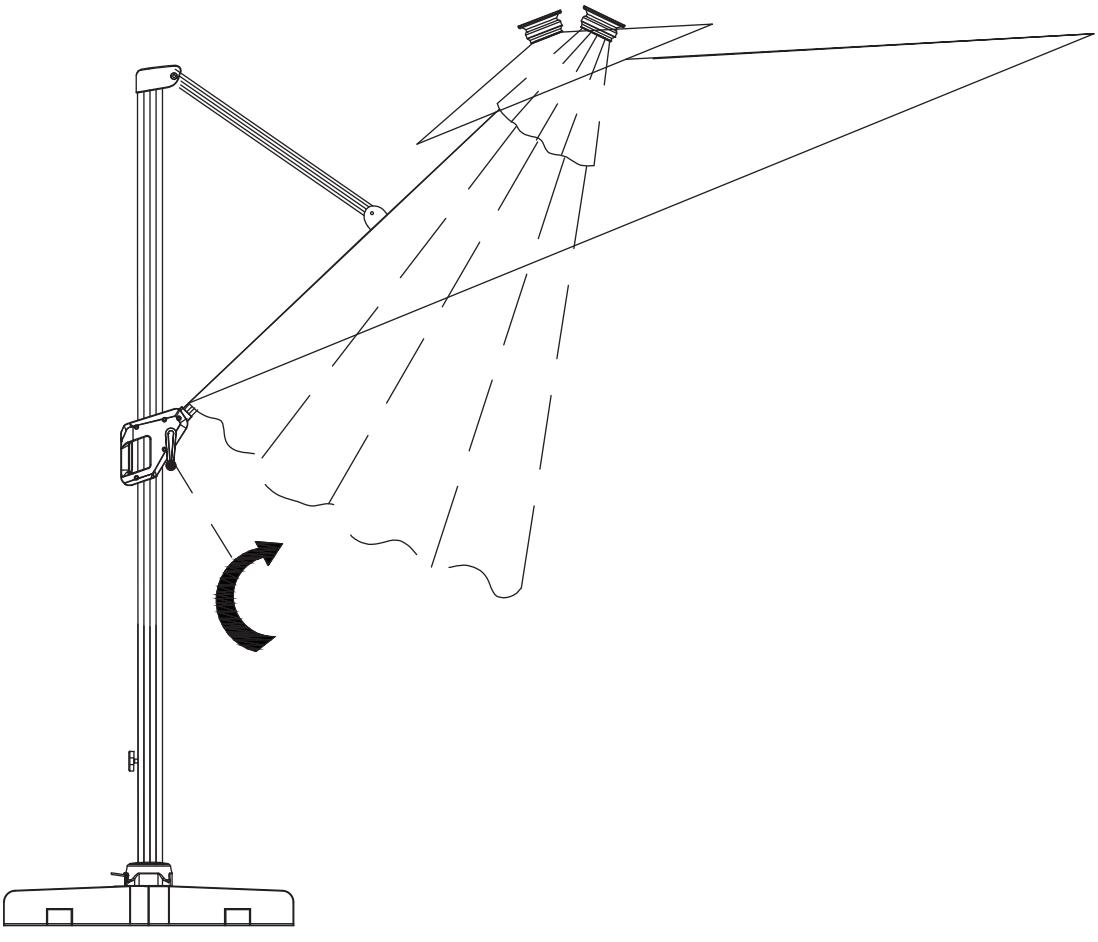

3

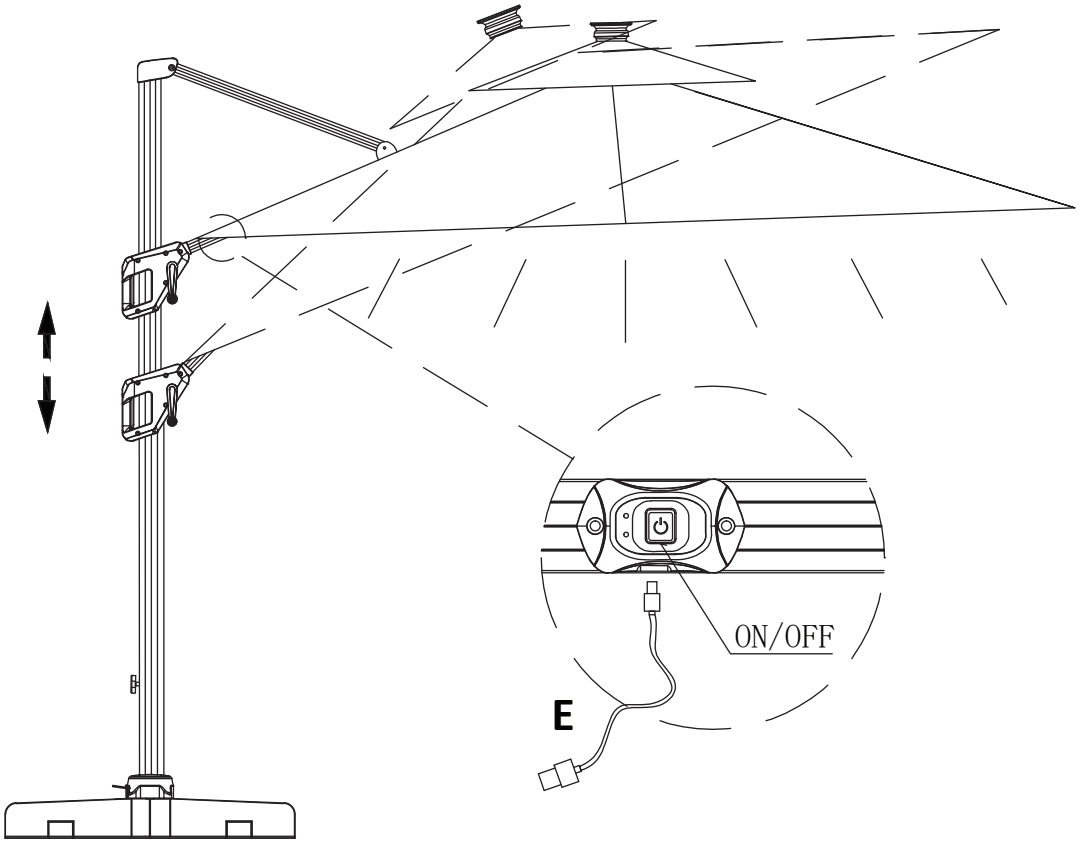
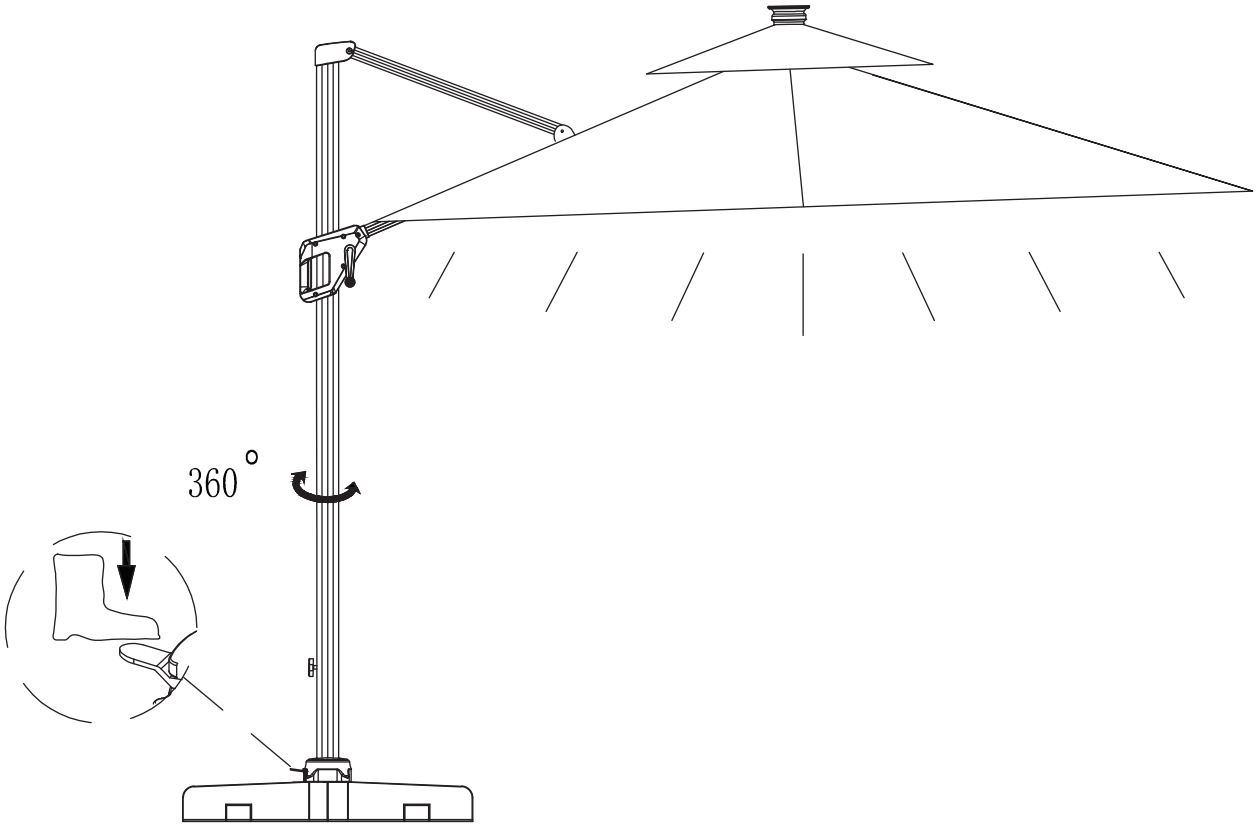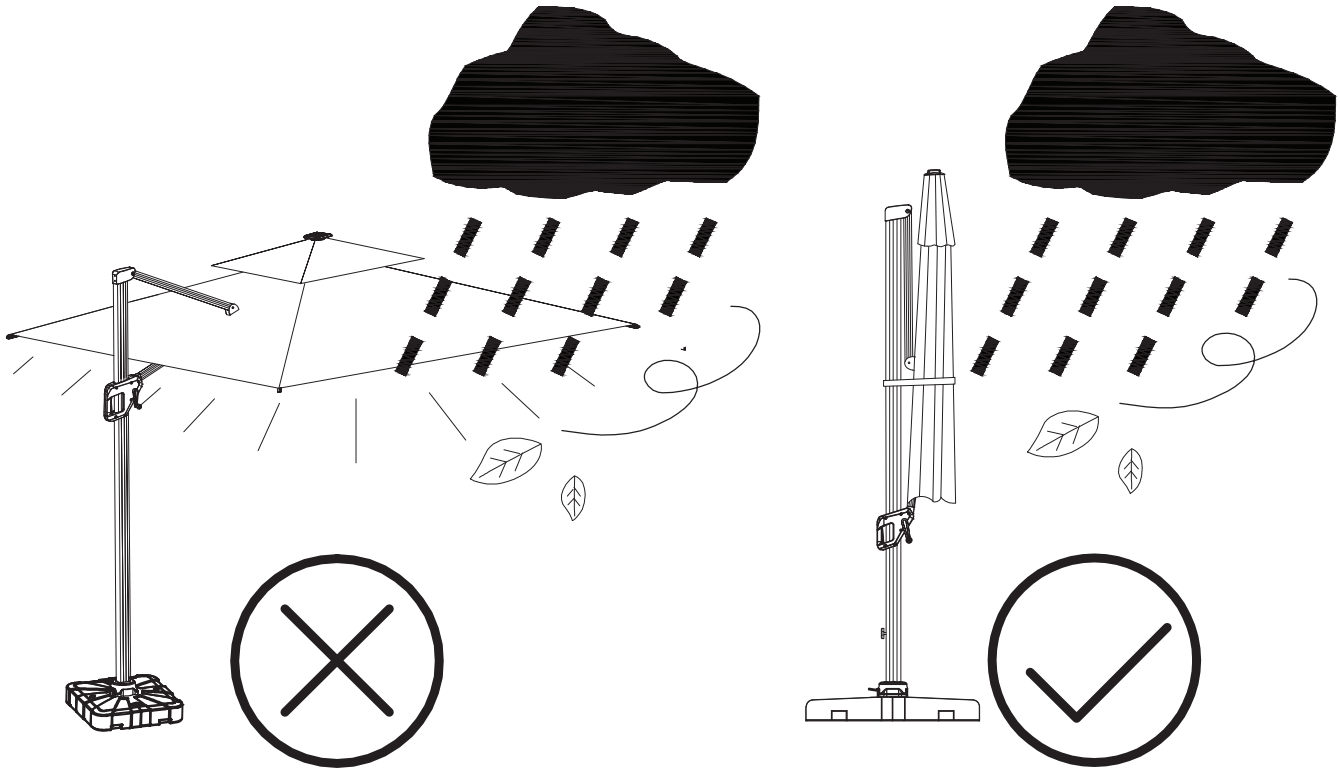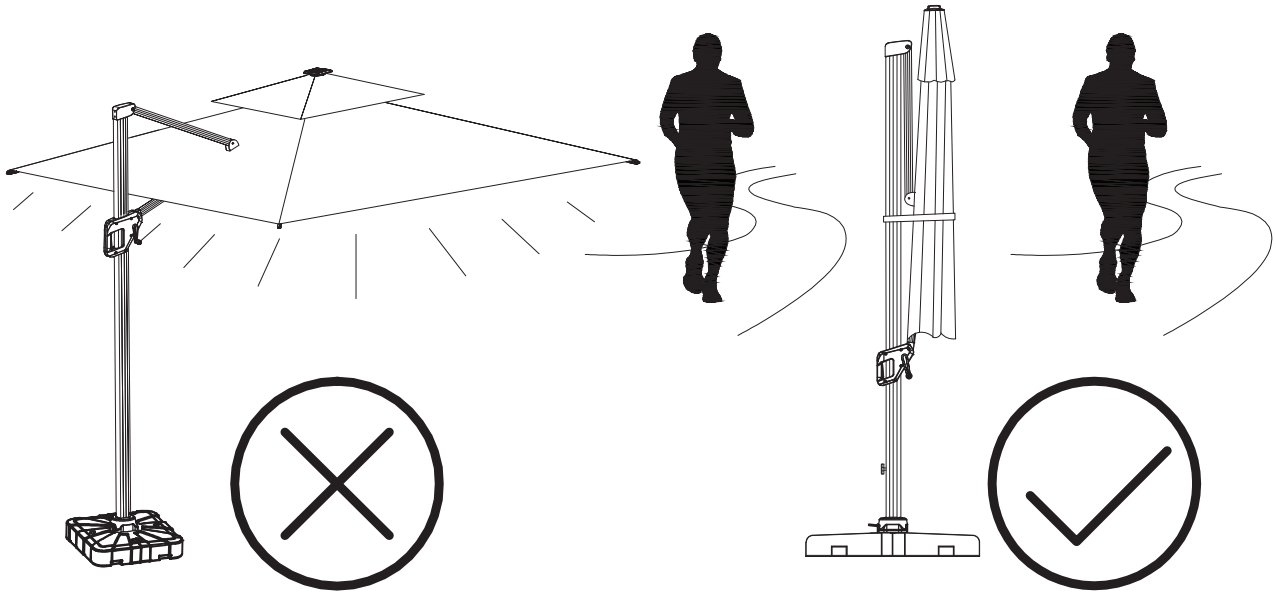
4